## TOP VIEW

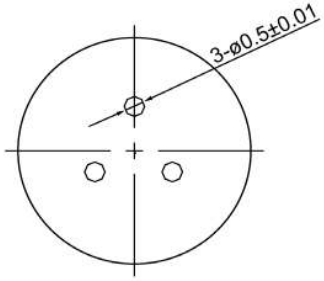


## SIDE VIEW

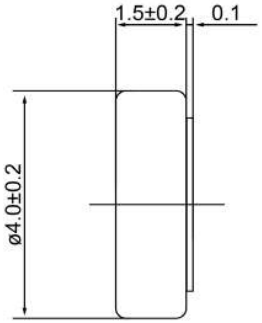


## BOTTOM VIEW

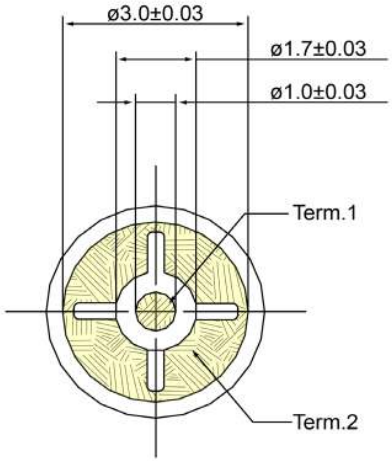


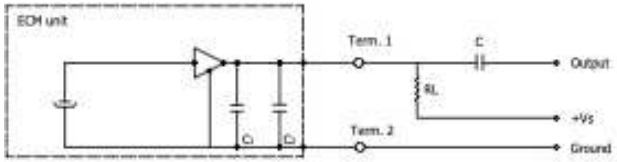


C1 : 10 PF
C2 : 33 PF

### Specifications

| Description | Value | Unit |
|---|---|---|
| Directivity | Omnidirectional | |
| Technology | Electret Condenser | |
| Sensitivity | -40 | (dB) |
| Frequency Range | 100 ~ 16,000 | (Hz) |
| Rated Voltage | 2 | (V) |
| Output Impedance | 2,200 | (Ohm) |
| Connection Method | Solderless | |
| Voltage Range | 2 ~ 10 | (V) |
| Max Rated Current | 0.5 | (mA) |
| Minimum Signal to Noise Ratio | >60 | (dB) |
| Operating Temperature | -20 ~ +70 | °C |
| Storage Temperature | -40 ~ +85 | °C |

### Notes

1) All dimensions are in mm unless otherwise noted
2) All parts meet RoHS

### Revision History

| Version | Description | Date | Approved |
|---|---|---|---|
| 1 | Released from Engineering | 10/21/2013 | J.S |

| Drawn by | Date | Checked by | Date | Approved by | Date |
|---|---|---|---|---|---|
| A.B. | 10/21/2013 | C.E. | 10/21/2013 | J.S | 10/21/2013 |

DB UNLIMITED

**Electret Condenser Microphone**

**MO044002-1**


©2013, DB Unlimited