PD57045
PD57045S

RF POWER TRANSISTORS
The LdmoST FAMILY

N-CHANNEL ENHANCEMENT-MODE LATERAL MOSFETs

- EXCELLENT THERMAL STABILITY
- COMMON SOURCE CONFIGURATION
- P_{OUT} = 45 W with 13 dB gain @ 945 MHz / 28V
- NEW RF PLASTIC PACKAGE

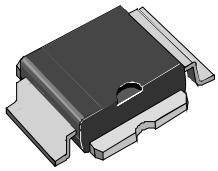

PowerSO-10RF (formed lead)

ORDER CODE	BRANDING
PD57045	PD57045

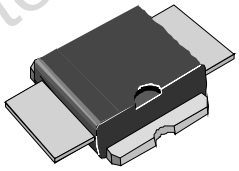

PowerSO-10RF (straight lead)

ORDER CODE	BRANDING
PD57045S	PD57045S

DESCRIPTION

The PD57045 is a common source N-Channel, enhancement-mode lateral Field-Effect RF power transistor. It is designed for high gain, broad band commercial and industrial applications. It operates at 28 V in common source mode at frequencies of up to 1 GHz. PD57045 boasts the excellent gain, linearity and reliability of ST's latest LDMOS technology mounted in the first true SMD plastic RF power package, PowerSO-10RF. PD57045's superior linearity performance makes it an ideal solution for base station applications.

The PowerSO-10 plastic package, designed to offer high reliability, is the first ST JEDEC approved, high power SMD package. It has been specially optimized for RF needs and offers excellent RF performances and ease of assembly.

Mounting recommendations are available in ***www.st.com/rf/*** *(look for application note AN1294)*

Obsolete Product(s) - Obsolete Product(s)

ABSOLUTE MAXIMUM RATINGS (T_{CASE} = 25°C)

Symbol	Parameter	Value	Unit
$V_{(BR)DSS}$	Drain-Source Voltage	65	V
V_{GS}	Gate-Source Voltage	± 20	V
I_D	Drain Current	5	A
P_{DISS}	Power Dissipation (@ Tc = 70°C)	73	W
Tj	Max. Operating Junction Temperature	165	°C
T_{STG}	Storage Temperature	-65 to +150	°C

THERMAL DATA

$R_{th(j-c)}$	Junction -Case Thermal Resistance	1.2	°C/W

ELECTRICAL SPECIFICATION (T_{CASE} = 25°C)

STATIC

Symbol	Test Conditions	Min.	Typ.	Max.	Unit
$V_{(BR)DSS}$	V_{GS} = 0 V I_{DS} = 1 mA	65			V
I_{DSS}	V_{GS} = 0 V V_{DS} = 28 V			1	µA
I_{GSS}	V_{GS} = 20 V V_{DS} = 0 V			1	µA
$V_{GS(Q)}$	V_{DS} = 28 V I_D = 250 mA	2.0		5.0	V
$V_{DS(ON)}$	V_{GS} = 10 V I_D = 3 A		0.7	0.9	V
g_{FS}	V_{DS} = 10 V I_D = 4 A	2.0	2.7		mho
C_{ISS}	V_{GS} = 0 V V_{DS} = 28 V f = 1 MHz		86		pF
C_{OSS}	V_{GS} = 0 V V_{DS} = 28 V f = 1 MHz		47		pF
C_{RSS}	V_{GS} = 0 V V_{DS} = 28 V f = 1 MHz		3.6		pF

DYNAMIC

Symbol	Test Conditions	Min.	Typ.	Max.	Unit
P_{1dB}	V_{DD} = 28 V I_{DQ} = 250 mA f = 945 MHz	45			W
G_P	V_{DD} = 28 V I_{DQ} = 250 mA P_{OUT} = 45 W f = 945 MHz	13	14.5		dB
η_D	V_{DD} = 28 V I_{DQ} = 250 mA P_{OUT} = 45 W f = 945 MHz	50			%
Load mismatch	V_{DD} = 28 V I_{DQ} = 250 mA P_{OUT} = 45 W f = 945 MHz ALL PHASE ANGLES	10:1			VSWR

PIN CONNECTION

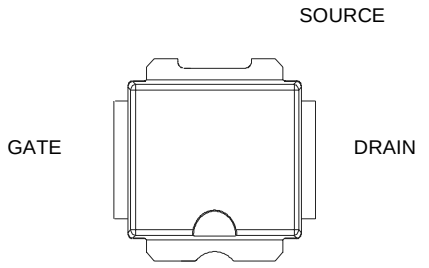

SC15200

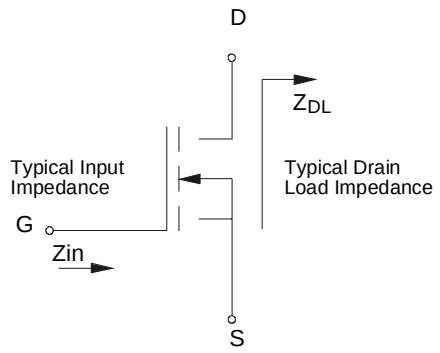

SC13140

Obsolete Product(s) - Obsolete Product(s)

IMPEDANCE DATA

PD57045S

FREQ. MHz	Z_{IN} (Ω)	Z_{DL}(Ω)
925	.71 + j 2.32	1.29 - j .35
945	.69 + j 2.92	1.25 - j .29
960	.55 + j 2.78	1.18 - j .83

TYPICAL PERFORMANCE

Capacitance vs. Drain Voltage

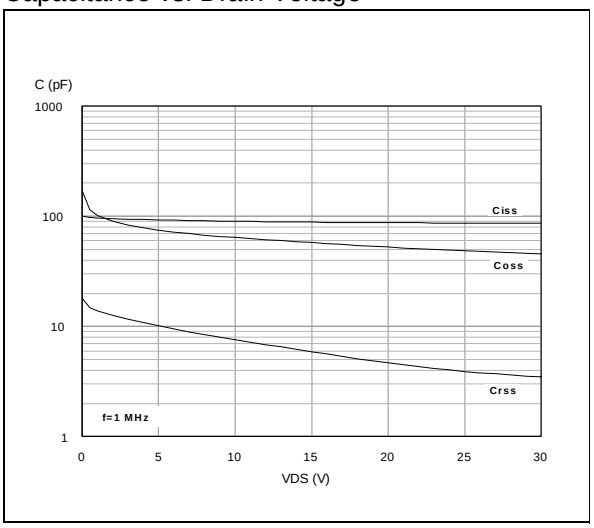

Drain Current vs. Gate Voltage

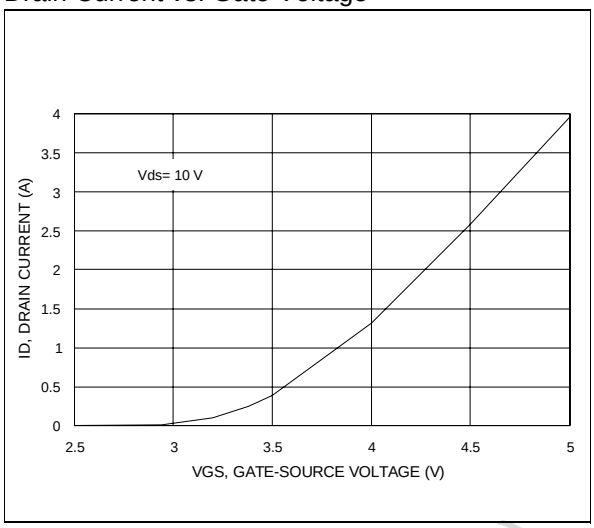

Gate-Source Voltage vs. Case Temperature

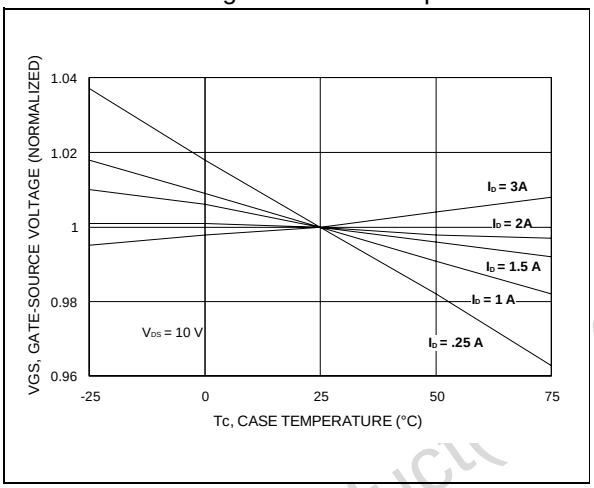

Safe Operating Area

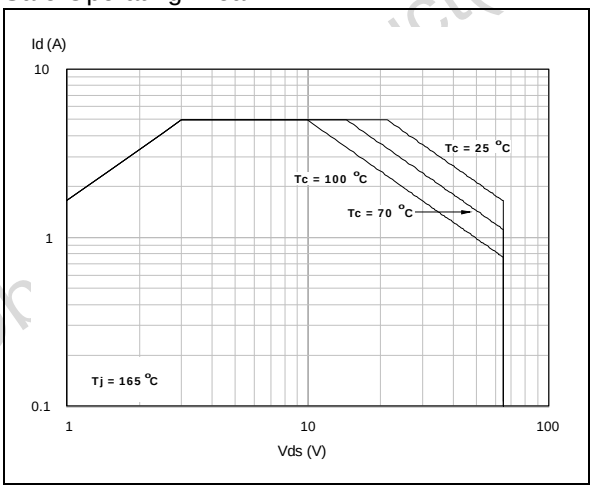

Obsolete Product(s)

TYPICAL PERFORMANCE

PD57045S

Output Power vs. Input Power

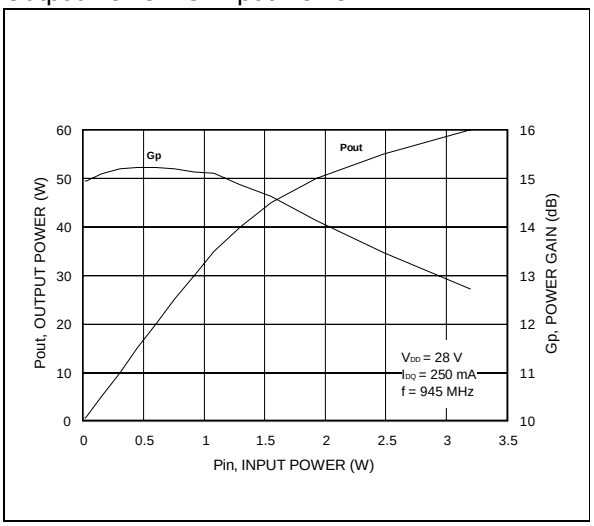

Power Gain vs. Output Power

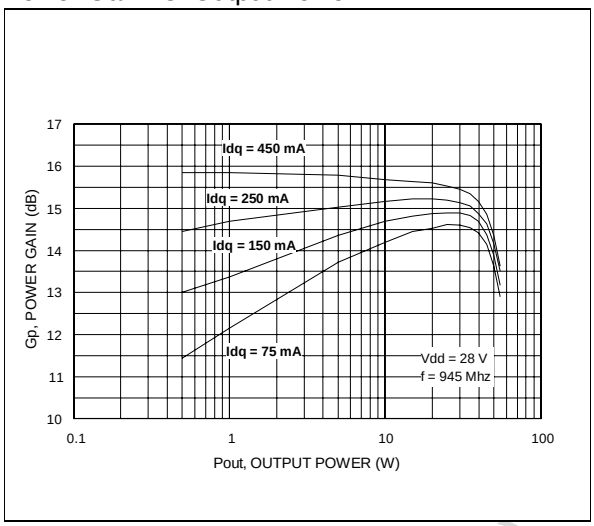

Drain Efficiency vs. Output Power

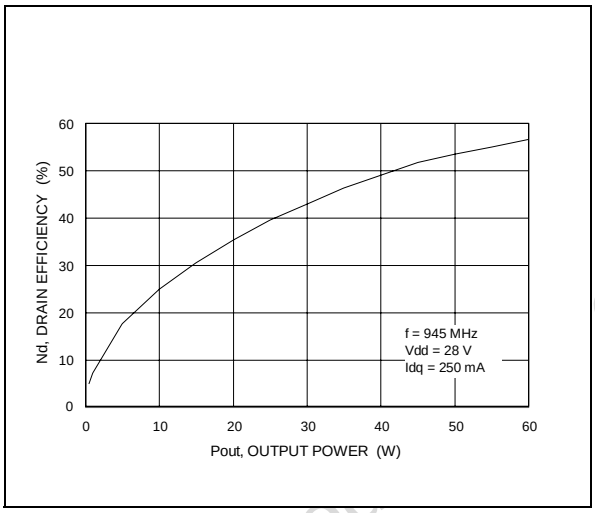

Return Loss vs. Output Power

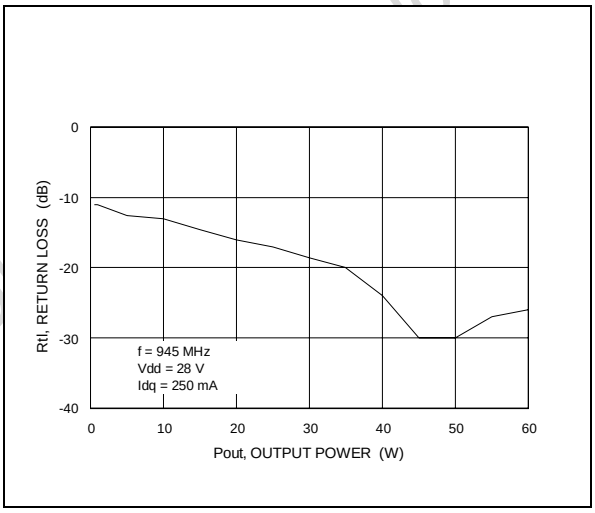

Output Power vs. Bias Current

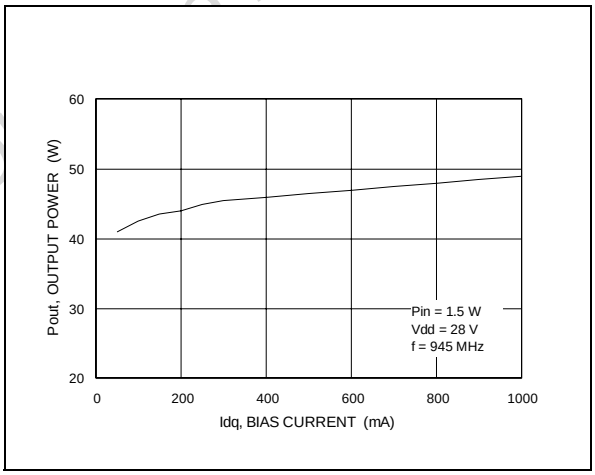

Drain Efficiency vs. Bias Current

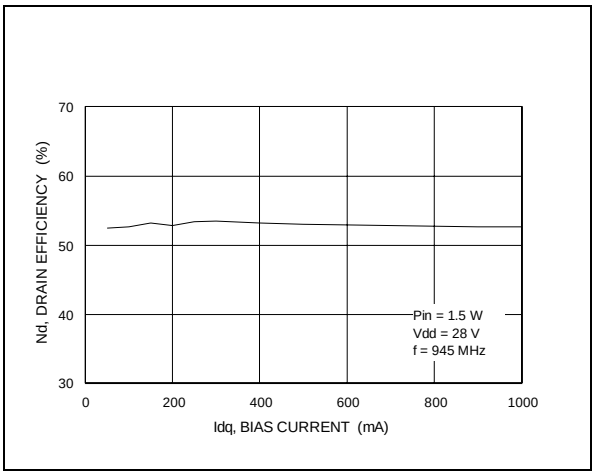

TYPICAL PERFORMANCE

Output Power vs. Drain Voltage

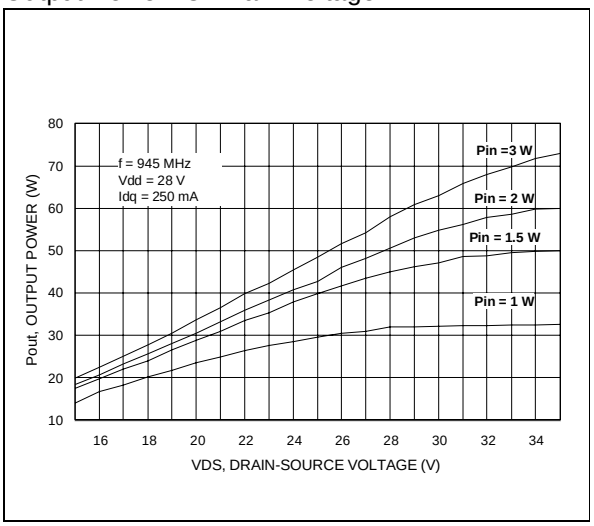

Output Power vs. Gate Bias Voltage

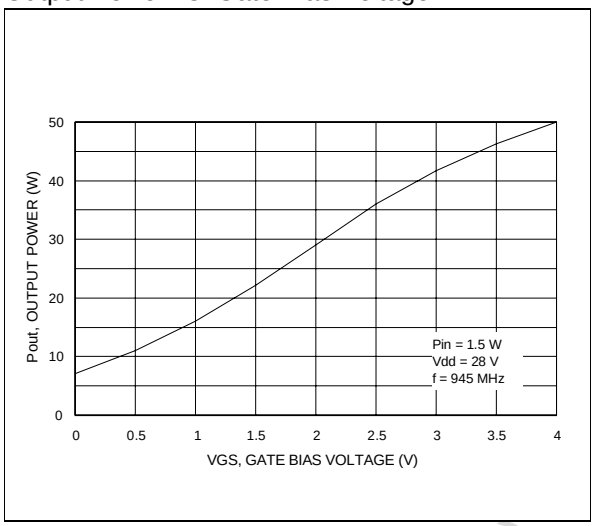

Obsolete Product(s) - Obsolete Product(s)

TEST CIRCUIT SCHEMATIC

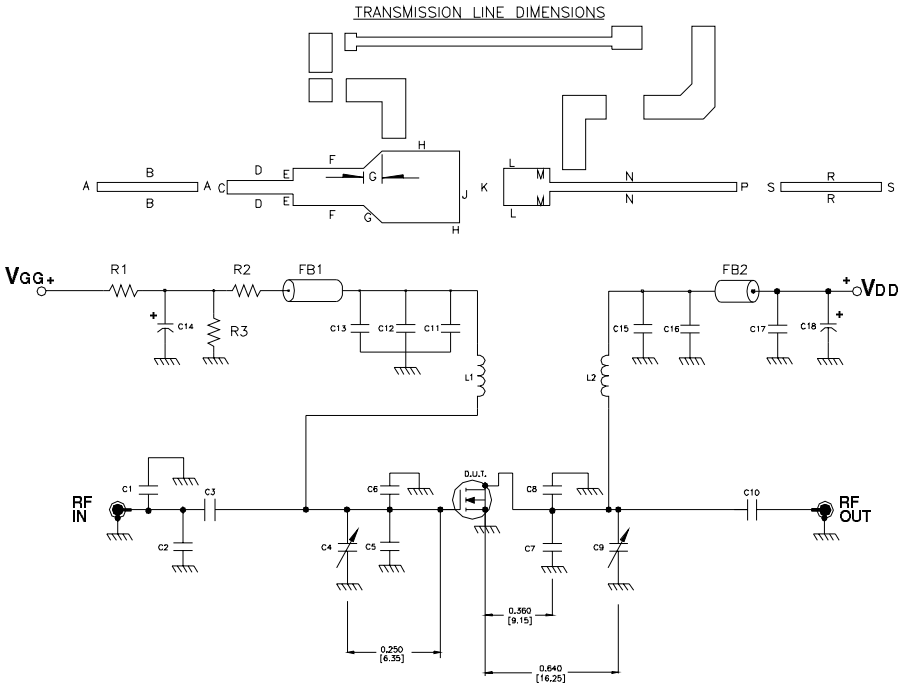

DIMENSION TABLE		
DIM	IN	MM
A	0.076	1,93
B	0.925	23,50
C	0.116	2,95
D	0.570	14,48
E	0.100	2,54
F	0.609	15,47
G	0.160	4,06
H	0.667	16,94
J	0.616	15,65
K	0.316	18,03
L	0.396	10,06
M	0.120	3,05
N	1.610	40,89
P	0.076	1,93
R	0.925	23,50
S	0.076	1,93

NOTES:
1. DIMENSIONS AT COMPONENT SYMBOLS ARE REFERENCE FOR COMPONENT PLACEMENT.
2. GAP BETWEEN GROUND & TRANSMISSION LINE = 0.056 [1.42] +0.002 [0.05] -0.000 [0.00] TYP.
3. DIMENSIONS OF INPUT AND OUTPUT COMPONENT FROM EDGE OF TRANSMISSION LINES.

Obsolete Product(s) - Obsolete

TEST CIRCUIT COMPONENT PART LIST

COMPONENT	DESCRIPTION
L1,L2	INDUCTOR, 5 TURNS AIR WOUND #22AWG, ID 0.059{1.49}, NYLON COATED MAGNET WIRE
FB1,FB2	SHIELD BEAD SURFACE MOUNT EMI
R1	18 K OHM, 1 W SURFACE MOUNT CHIP RESISTOR
R2	4.7 M OHM, 1 W SURFACE MOUNT CHIP RESISTOR
R3	120 OHM, 2 W SURFACE MOUNT CHIP RESISTOR
C1,C2	3 pF ATC 100B SURFACE MOUNT CERAMIC CHIP CAPACITOR
C3,C10,C11,C15	47 pF ATC 100B SURFACE MOUNT CERAMIC CHIP CAPACITOR
C4,C9	0.8-8.0 pF GIGA TRIM VARIABLE CAPACITOR
C5,C6,C7,C8	7.5 pF ATC 100B SURFACE MOUNT CERAMIC CHIP CAPACITOR
C12	1000 pF ATC 700B SURFACE MOUNT CERAMIC CHIP CAPACITOR
C13,C17	0.1 µF/500 V SURFACE MOUNT CERAMIC CHIP CAPACITOR
C14	10 µF/50 V ALUMINUM ELECTROLYTIC RADIAL LEAD CAPACITOR
C16	100 pF ATC 100B SURFACE MOUNT CERAMIC CHIP CAPACITOR
C18	220 µF/63 V ALUMINUM ELECTROLYTIC RADIAL LEAD CAPACITOR
BOARD	ROGER, ULTRA LAM 2000, THK 0.030”, εr = 2.55 2oz. ED cu 2 SIDES.

TEST CIRCUIT

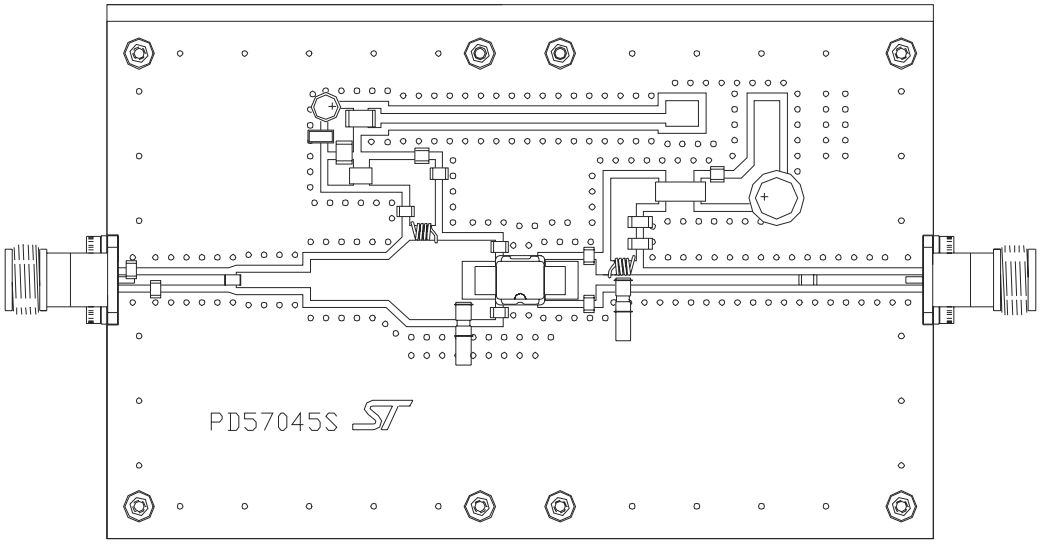

TEST CIRCUIT PHOTOMASTER

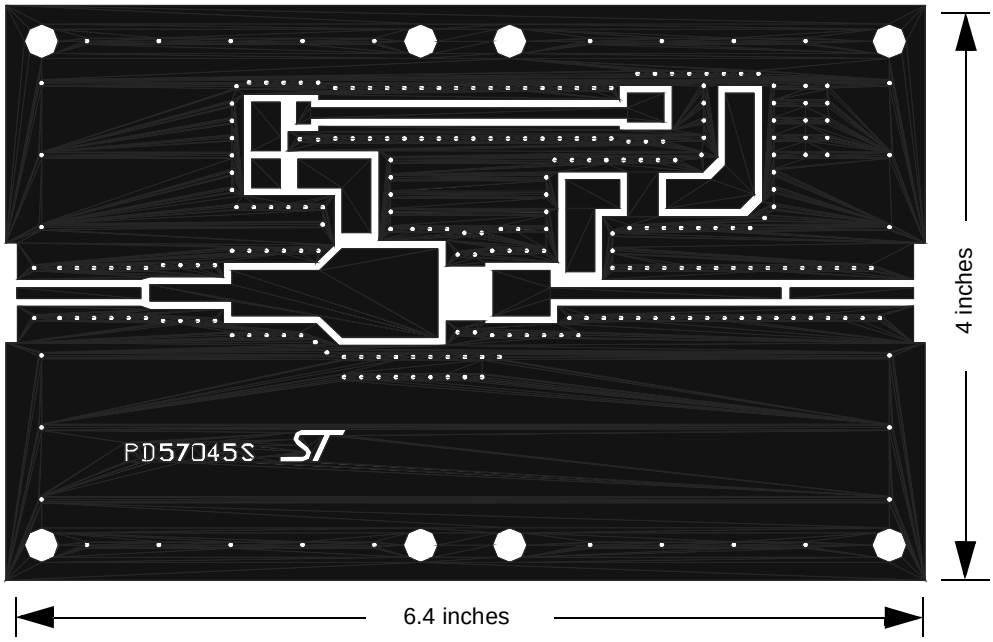

Obsolete Product

COMMON SOURCE S-PARAMETER (PD57045S)
(V_{DS} = 13.5V I_{DS} = 1.5A)

FREQ (MHz)	$\|S_{11}\|$	$S_{11}\angle\Phi$	$\|S_{21}\|$	$S_{21}\angle\Phi$	$\|S_{12}\|$	$S_{12}\angle\Phi$	$\|S_{22}\|$	$S_{22}\angle\Phi$
50	0.825	-170	14.34	85	0.014	-1	0.819	-171
100	0.875	-173	6.94	79	0.013	-6	0.824	-175
150	0.895	-175	4.67	75	0.013	-10	0.828	-175
200	0.908	-176	3.44	70	0.013	-14	0.837	-176
250	0.910	-177	2.70	65	0.012	-16	0.842	-176
300	0.916	-178	2.20	60	0.012	-18	0.854	-176
350	0.922	-178	1.82	55	0.011	-23	0.864	-176
400	0.926	-179	1.55	51	0.010	-25	0.874	-176
450	0.933	-179	1.32	47	0.010	-25	0.883	-177
500	0.937	-179	1.14	44	0.008	-25	0.893	-177
550	0.942	-180	1.00	40	0.008	-24	0.901	-177
600	0.946	180	0.88	37	0.007	-25	0.912	-177
650	0.949	180	0.79	34	0.007	-25	0.915	-178
700	0.951	179	0.70	32	0.006	-20	0.922	-178
750	0.954	179	0.63	29	0.005	-23	0.926	-179
800	0.958	178	0.57	27	0.005	-14	0.932	-179
850	0.961	178	0.52	24	0.004	-6	0.932	-180
900	0.963	178	0.47	22	0.004	3	0.942	179
950	0.964	177	0.44	20	0.004	1	0.942	180
1000	0.966	177	0.40	18	0.004	7	0.943	179
1050	0.967	176	0.37	16	0.003	26	0.946	179
1100	0.966	176	0.35	15	0.003	51	0.949	178
1150	0.969	176	0.32	13	0.003	56	0.950	179
1200	0.970	175	0.30	11	0.004	62	0.953	179
1250	0.970	175	0.29	9	0.004	55	0.967	178
1300	0.971	175	0.26	7	0.004	65	0.972	176
1350	0.972	174	0.25	6	0.004	71	0.958	176
1400	0.972	174	0.23	4	0.005	81	0.961	176
1450	0.970	174	0.22	3	0.006	91	0.958	175
1500	0.970	173	0.20	2	0.007	100	0.963	175

Obsolete

COMMON SOURCE S-PARAMETER (PD57045S)
(V_{DS} = 28V I_{DS} = 1.5A)

FREQ (MHz)	$IS_{11}I$	$S_{11}\angle\Phi$	$IS_{21}I$	$S_{21}\angle\Phi$	$IS_{12}I$	$S_{12}\angle\Phi$	$IS_{22}I$	$S_{22}\angle\Phi$
50	0.829	-161	20.72	92	0.012	2	0.718	-166
100	0.872	-168	10.33	82	0.011	-6	0.731	-170
150	0.897	-172	6.84	74	0.011	-10	0.745	-171
200	0.910	-174	5.02	68	0.010	-14	0.765	-171
250	0.913	-175	3.86	61	0.010	-17	0.783	-171
300	0.922	-176	3.10	55	0.009	-23	0.803	-171
350	0.928	-176	2.53	50	0.009	-25	0.823	-172
400	0.934	-177	2.12	45	0.008	-27	0.839	-172
450	0.941	-178	1.79	41	0.007	-26	0.856	-172
500	0.946	-178	1.53	37	0.006	-26	0.872	-173
550	0.949	-179	1.32	34	0.005	-27	0.884	-174
600	0.955	-179	1.16	31	0.005	-24	0.898	-174
650	0.959	-180	1.03	27	0.004	-18	0.902	-175
700	0.960	180	0.91	25	0.004	-17	0.914	-175
750	0.963	179	0.81	22	0.003	-7	0.919	-176
800	0.967	179	0.73	19	0.003	-1	0.928	-176
850	0.968	178	0.67	17	0.003	11	0.927	-177
900	0.968	178	0.60	15	0.003	28	0.937	-178
950	0.972	178	0.55	12	0.003	36	0.939	-178
1000	0.972	177	0.50	11	0.003	56	0.94	-179
1050	0.972	177	0.49	9	0.003	56	0.944	-179
1100	0.972	176	0.43	7	0.004	63	0.950	-180
1150	0.974	176	0.40	5	0.004	66	0.950	-179
1200	0.975	176	0.37	4	0.005	72	0.950	-180
1250	0.975	175	0.35	3	0.006	75	0.968	180
1300	0.976	175	0.32	0	0.006	77	0.973	178
1350	0.977	174	0.30	-1	0.006	81	0.960	178
1400	0.976	174	0.28	-2	0.006	84	0.960	177
1450	0.973	174	0.26	-3	0.007	98	0.958	177
1500	0.973	174	0.25	-4	0.008	102	0.963	176

Obsolete Product

PowerSO-10RF Formed Lead (Gull Wing) MECHANICAL DATA

DIM.	mm			Inch		
	MIN.	TYP.	MAX	MIN.	TYP.	MAX
A1	0	0.05	0.1	0.	0.0019	0.0038
A2	3.4	3.5	3.6	0.134	0.137	0.142
A3	1.2	1.3	1.4	0.046	0.05	0.054
A4	0.15	0.2	0.25	0.005	0.007	0.009
a		0.2			0.007	
b	5.4	5.53	5.65	0.212	0.217	0.221
c	0.23	0.27	0.32	0.008	0.01	0.012
D	9.4	9.5	9.6	0.370	0.374	0.377
D1	7.4	7.5	7.6	0.290	0.295	0.298
E	13.85	14.1	14.35	0.544	0.555	0.565
E1	9.3	9.4	9.5	0.365	0.37	0.375
E2	7.3	7.4	7.5	0.286	0.292	0.294
E3	5.9	6.1	6.3	0.231	0.24	0.247
F		0.5			0.019	
G		1.2			0.047	
L	0.8	1	1.1	0.030	0.039	0.042
R1			0.25			0.01
R2		0.8			0.031	
T	2 deg	5 deg	8 deg	2 deg	5 deg	8 deg
T1		6 deg			6 deg	
T2		10 deg			10 deg	

Note (1): Resin protrusions not included (max value: 0.15 mm per side)

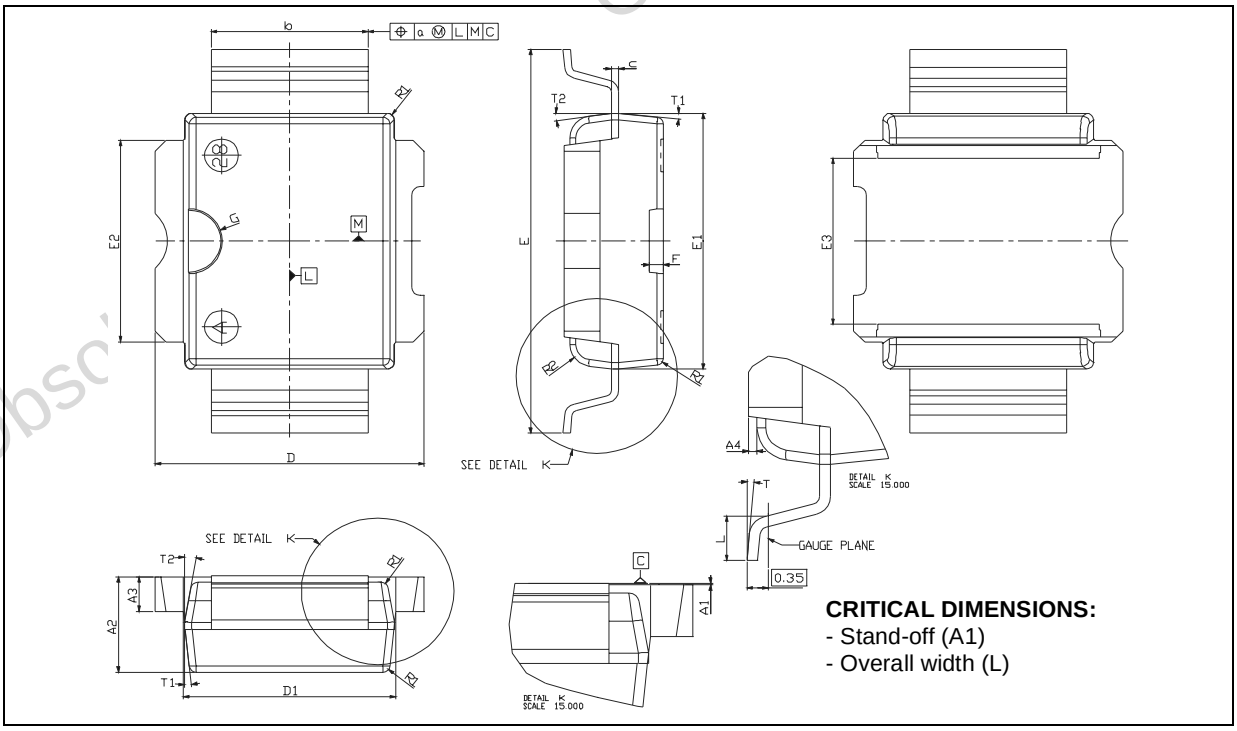

Obsolete Product(s)

PowerSO-10RF Straight Lead MECHANICAL DATA

DIM.	mm			Inch		
	MIN.	TYP.	MAX	MIN.	TYP.	MAX
A1	1.62	1.67	1.72	0.064	0.065	0.068
A2	3.4	3.5	3.6	0.134	0.137	0.142
A3	1.2	1.3	1.4	0.046	0.05	0.054
A4	0.15	0.2	0.25	0.005	0.007	0.009
a		0.2			0.007	
b	5.4	5.53	5.65	0.212	0.217	0.221
c	0.23	0.27	0.32	0.008	0.01	0.012
D	9.4	9.5	9.6	0.370	0.374	0.377
D1	7.4	7.5	7.6	0.290	0.295	0.298
E	15.15	15.4	15.65	0.595	0.606	0.615
E1	9.3	9.4	9.5	0.365	0.37	0.375
E2	7.3	7.4	7.5	0.286	0.292	0.294
E3	5.9	6.1	6.3	0.231	0.24	0.247
F		0.5			0.019	
G		1.2			0.047	
R1			0.25			0.01
R2		0.8			0.031	
T1		6 deg			6 deg	
T2		10 deg			10 deg	

Note (1): Resin protrusions not included (max value: 0.15 mm per side)

Obsolete Product(s)

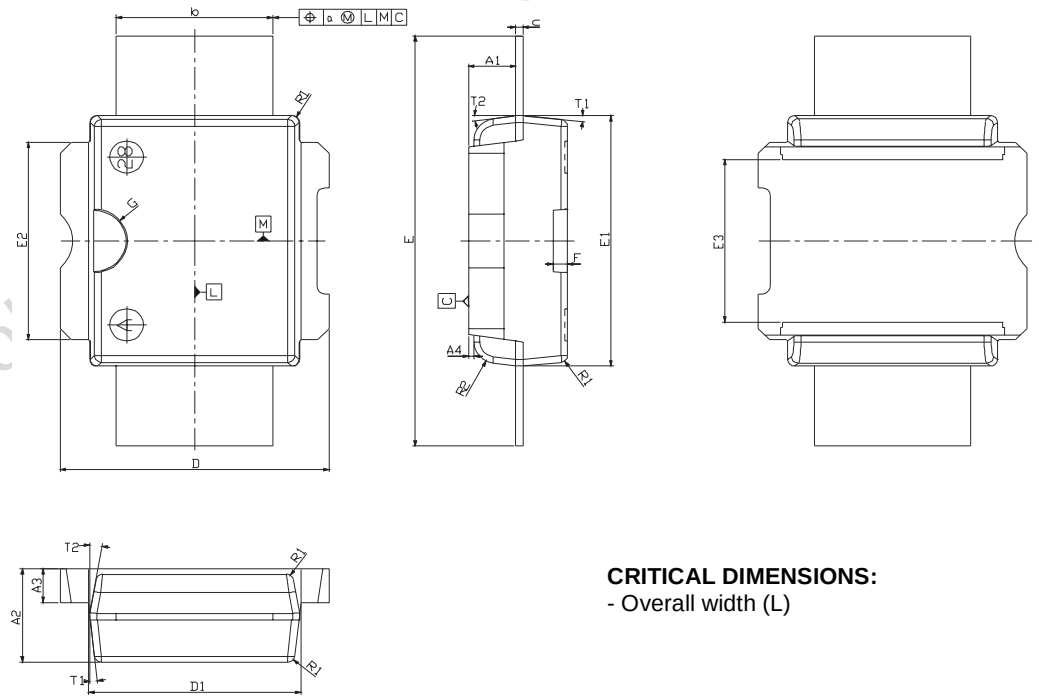

CRITICAL DIMENSIONS:
- Overall width (L)

Obsolete Product(s) - Obsolete Product(s)

Information furnished is believed to be accurate and reliable. However, STMicroelectronics assumes no responsibility for the consequences of use of such information nor for any infringement of patents or other rights of third parties which may result from its use. No license is granted by implication or otherwise under any patent or patent rights of STMicroelectronics. Specifications mentioned in this publication are subject to change without notice. This publication supersedes and replaces all information previously supplied. STMicroelectronics products are not authorized for use as critical components in life support devices or systems without express written approval of STMicroelectronics.

The ST logo is registered trademark of STMicroelectronics
® 2003 STMicroelectronics - All Rights Reserved

All other names are the property of their respective owners.

STMicroelectronics GROUP OF COMPANIES
Australia - Brazil - Canada - China - Finland - France - Germany - Hong Kong - India - Israel - Italy - Japan -
Malaysia - Malta - Morocco - Singapore - Spain - Sweden - Switzerland - United Kingdom - U.S.A.
http://www.st.com