UNIT:mm

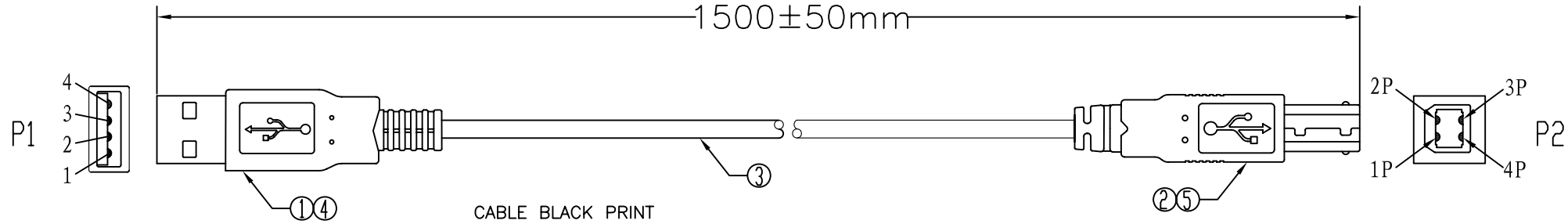

CABLE BLACK PRINT
HI-SPEED USB Revision 2.0 SHIELDED 28AWG/1P+24AWG/2C
E189529 AWM STYLE 2725 80°C 30V VW-1 VEGA TECH

PIN ASSIGNMENT:

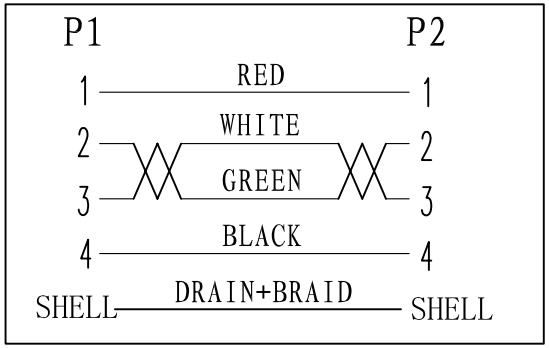

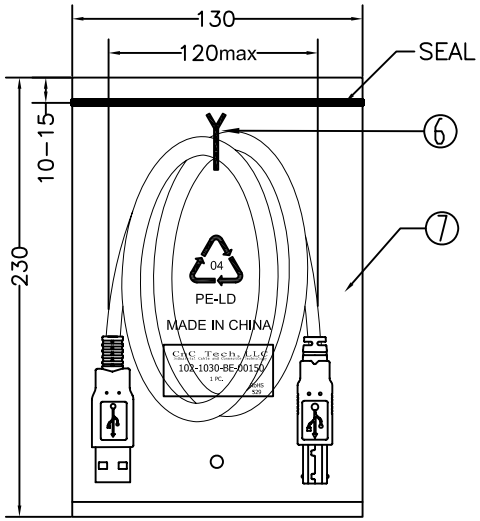

1PC/PE BAG

Electrical test:
1.100% short,open,miswire test
2.Conduct resistance:2 Ohm(max)
3.Insulation resistance:5Mohm(min)
4.dielectric test:DC 300V

NO.	NAME	Q'TY	SPECIFICATION
⑧	PE BAG	1/10	CLEAR SIZE:280*330*0.05mm PRINT BLACK"MADE IN CHINA"+"10PCS" 及出货时间，有透气孔.
⑦	PE BAG	1	CLEAR SIZE:130*230*0.05mm PRINT BLACK"MADE IN CHINA" 及出货时间，有透气孔.
⑥	TIE	1	WHITE L=100mm
⑤	OUT JACKET	6g	BEIGE(IV-29#) PVC-40P (MOULD NO:WM-65)
④	OUT JACKET	6g	BEIGE(IV-29#) PVC-40P (MOULD NO:WM-40)
③	CABLE	1	BEIGE(IV-29#) USB2.0 UL2725 28#/1P+24#/2C+AEB OD:4.7mm L=1500±10mm
②	CONN	1set	USB2.0 B MALE SHELL:NICKEL PIN G/F 3PCS TYPE INSULATOR COLOR:WHITE
①	CONN	1set	USB2.0 A MALE SHELL:NICKEL PIN G/F 3PCS TYPE INSULATOR COLOR:WHITE

CnC Tech, LLC
Industrial Cable and Connector Technology

DRAWED	ZHONGHS	DRAWING NO	
CHECKED		CUSTOMER	
APPROVAL		ITEM NO.	102-1030-BE-00150
DECIDED		DATE	2012-02-27
VERSIONS/EDITEON	A/0	PROJECTION	