THIS DRAWING IS UNPUBLISHED. RELEASED FOR PUBLICATION -,- .
© COPYRIGHT - By - ALL RIGHTS RESERVED.

LOC	DIST
GP	00

REVISIONS

P	LTR	DESCRIPTION	DATE	DWN	APVD
	J	REVISED PER ECO-14-011808	12AUG2014	AP	SB

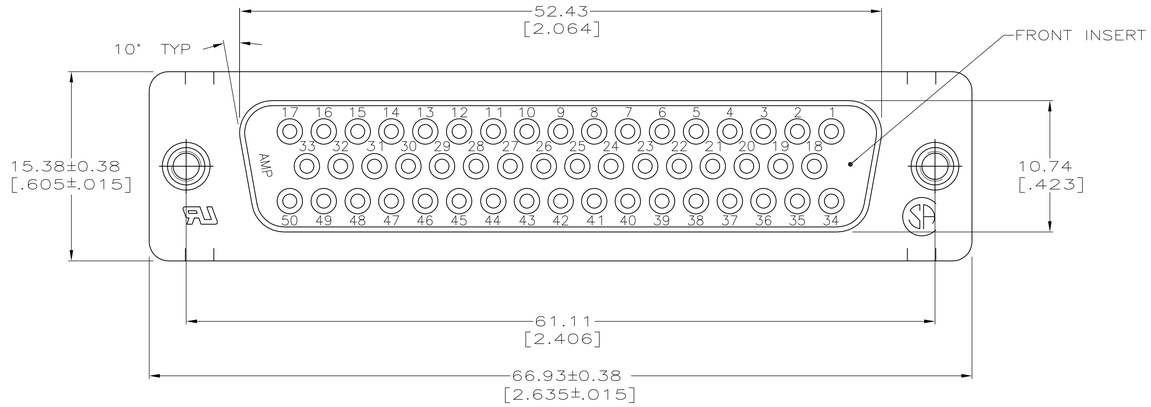

1. INSERTS: GLASS-FILLED PBT OR GLASS-FILLED NYLON, UL94V-0 RATED. COLOR: BLACK.
CONTACTS: BRONZE
SHELLS: CARBON STEEL
CLINCH NUT: CARBON STEEL

2. GOLD FLASH FOR LENGTH OF 2.54 [.100] MIN FROM MATING END, 2.54μm [.000100] MIN TIN OR TIN-LEAD FOR A LENGTH OF DIMENSION A FROM OPPOSITE END, BOTH OVER 1.27μm [.000050] MIN NICKEL.

3. 0.76μm [.000030] MIN GOLD FOR LENGTH OF 2.54 [.100] MIN FROM MATING END, 2.54μm [.000100] MIN TIN OR TIN-LEAD FOR A LENGTH OF DIMENSION A FROM OPPOSITE END, BOTH OVER 1.27μm [.000050] MIN NICKEL.
-OR-
GOLD FLASH OVER PALLADIUM-NICKEL, 0.76μm [.000030] MIN TOTAL FOR A LENGTH OF 2.54 [.100] MIN FROM MATING END, 2.54μm [.000100] MIN TIN OR TIN-LEAD FOR A LENGTH OF DIMENSION A FROM OPPOSITE END, BOTH OVER 1.27μm [.000050] MIN NICKEL.

4. SHELLS: 5.08μm [.000200] MIN TIN OVER 2.54μm [.000100] MIN COPPER
CLINCH NUT: 5.08μm [.000200] MIN ZINC WITH CLEAR CHROMATE COATING
CONTACTS: SEE TABLE

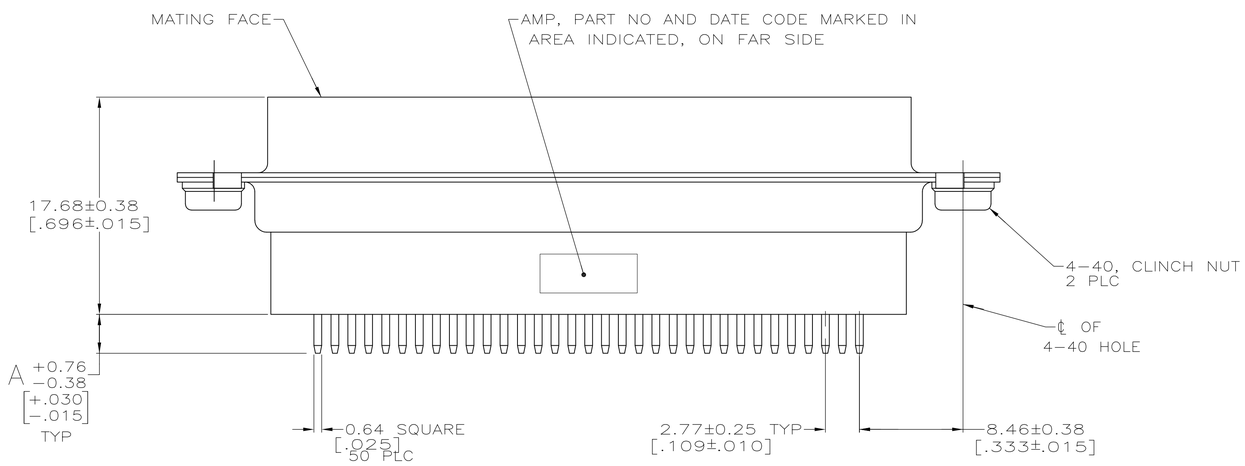

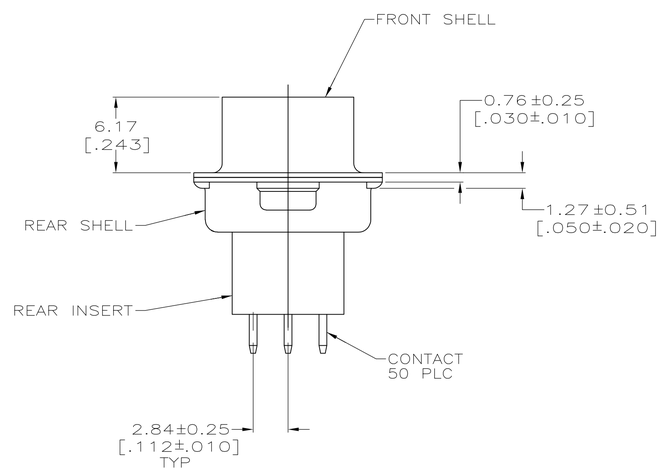

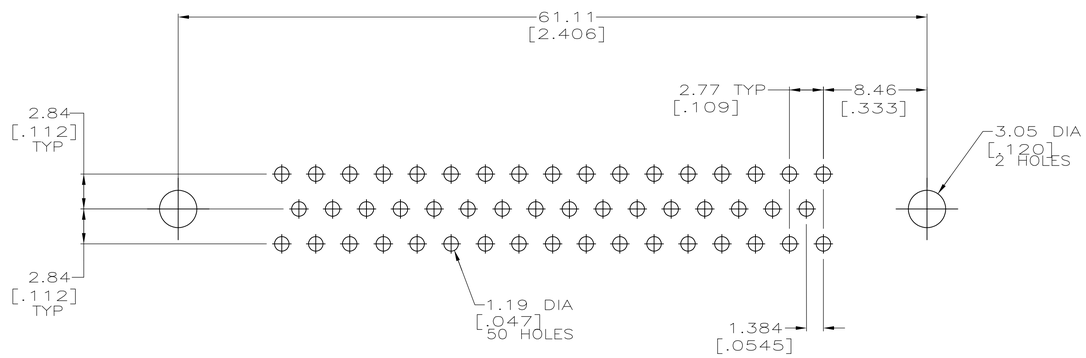

RECOMMENDED PC BOARD
MOUNTING DIMENSIONS

OBSOLETE	4.78 [.188]	2	747302-8
SUPSD BY 747302-1	4.78 [.188]	3	747302-7
OBSOLETE	16.54 [.651]	2	747302-6
OBSOLETE	16.54 [.651]	3	747302-5
OBSOLETE	10.85 [.427]	2	747302-4
OBSOLETE	10.85 [.427]	3	747302-3
SUPSD BY 747302-1	3.18 [.125]	2	747302-2
	3.18 [.125]	3	747302-1
	DIMENSION A	CONTACT FINISH	PART NUMBER

THIS DRAWING IS A CONTROLLED DOCUMENT.

DIMENSIONS: mm [INCHES]

TOLERANCES UNLESS OTHERWISE SPECIFIED:
0 PLC ± –
1 PLC ± –
2 PLC ± 0.13 [.005]
3 PLC ± –
4 PLC ± –
ANGLES ± 2°

MATERIAL 1

FINISH 4

DWN J McCLINTON 12-6-89
CHK R STONE 2-1-90
APVD C. ROHDE 2-02-90

PRODUCT SPEC 108-40025
APPLICATION SPEC 114-40013
WEIGHT –

CUSTOMER DRAWING

TE Connectivity

NAME RECEPTACLE ASSEMBLY, SIZE 5, 50 POSN, VERTICAL, FRONT METAL SHELL, AMPLIMITE® HD-20

SIZE	CAGE CODE	DRAWING NO	RESTRICTED TO
A1	00779	C-747302	–

SCALE 4:1 SHEET 1 OF 1 REV J

4805 (3/11)