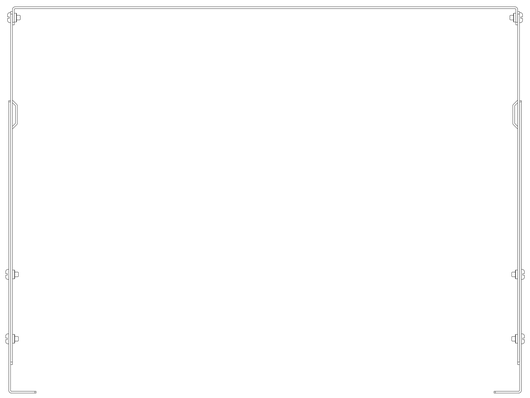

TOP VIEW

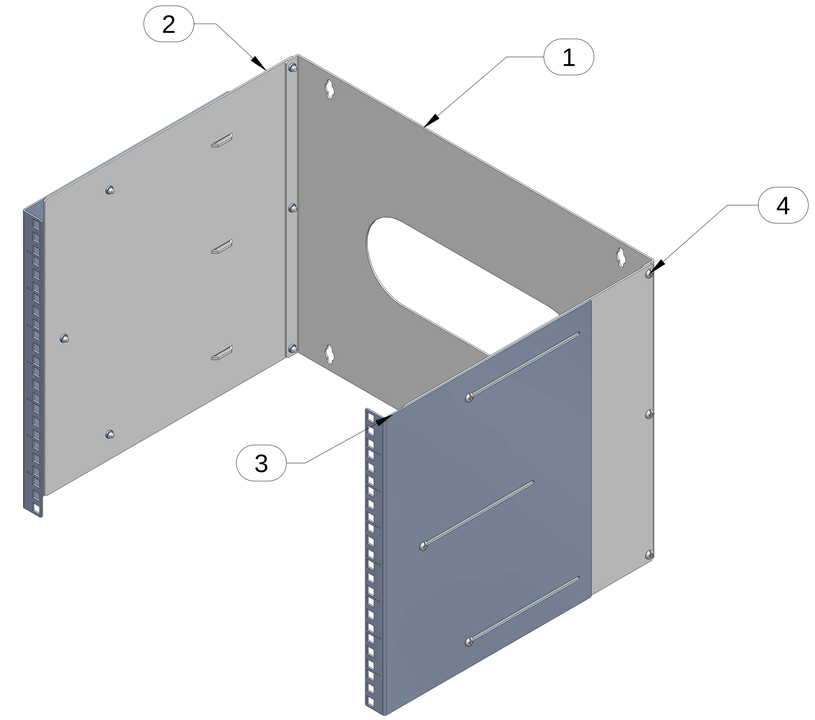

ISOMETRIC

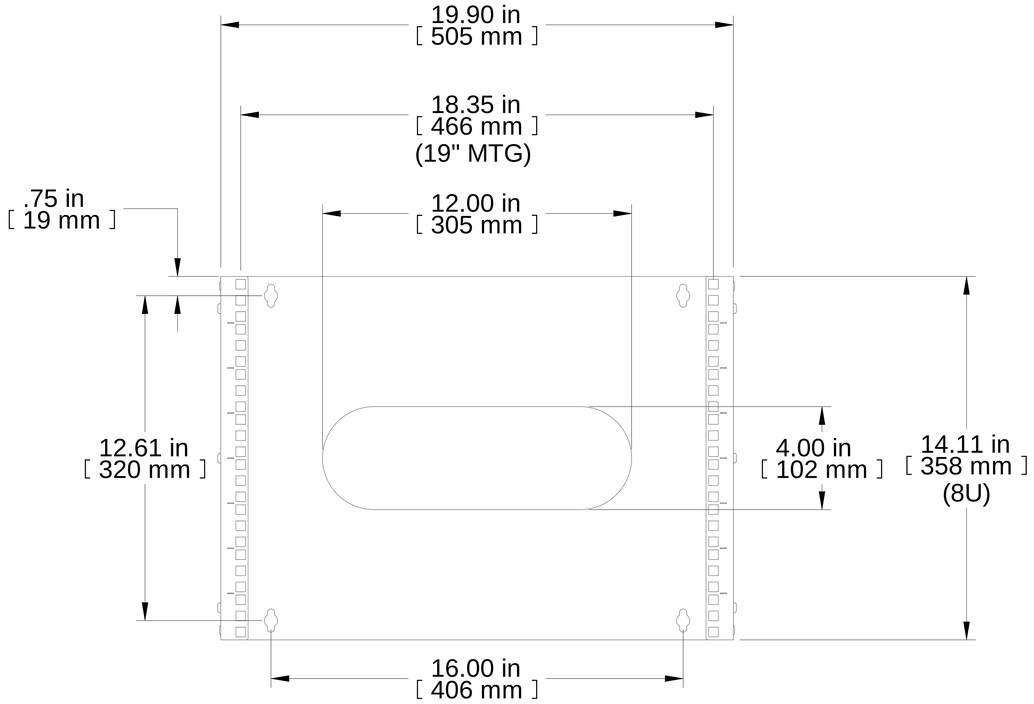

FRONT VIEW

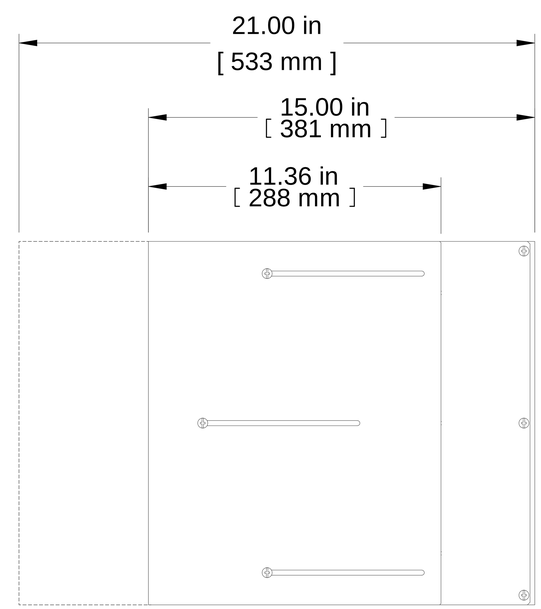

R.S. VIEW

Item Number	Title	Quantity
1	8U RB-AWR - REAR PANEL	1
2	8U RB-AWR PEM SIDE PANEL	2
3	8U RB-AWR ADJ SIDE BRKTS	2
4	SCREW 10-32 X 3/8 BDHD SLZP	12

PART NUMBERS

RB-AWR8	PAINTED BLACK THIN FILM

NOTES

Adjustable Depth: 15 in. to 21 in.
M5 Equipment Mounting Hardware Included
Wall Mounting Hardware NOT Included

Français

Pour tous les détails sur nos produits,
svp veuillez consulter notre site www.hammondmfg.com

Data subject to change without notice. Isometric drawing not to scale.
Les données sont sujettes à changement sans préavis.

HAMMOND MANUFACTURING®

www.hammondmfg.com

PART NO. **RB-AWR8**