THIS DRAWING IS UNPUBLISHED. RELEASED FOR PUBLICATION 1997
© COPYRIGHT 1997 BY - ALL RIGHTS RESERVED.

REVISIONS					
P	LTR	DESCRIPTION	DATE	DWN	APVD
	A10	ECR-16-015318	19SEP2017	GR	MKO
	A11	ECR-16-016768	19SEP2017	GR	MKO
	A12	ECR-17-013084	29MAR18	SG	MKO

~~PN 1.3 & 2.3~~

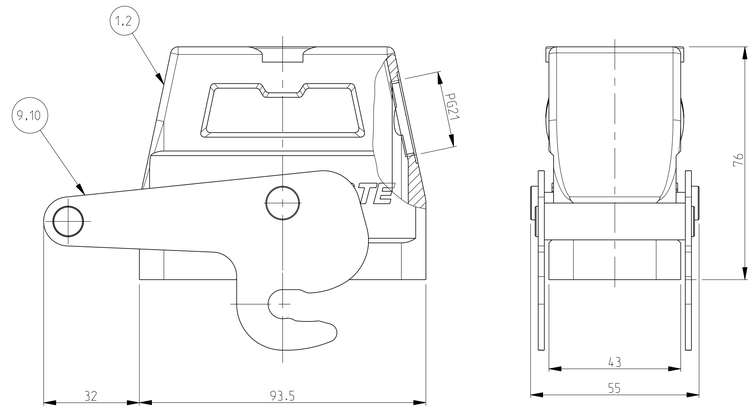

PN ~~0.4, 0.1~~, 2-6 & ~~1.6~~

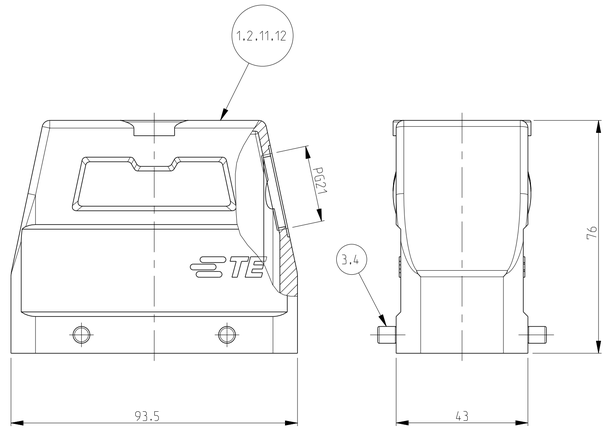

NOTES

1 Material: Housing: aluminium diecasting alloy

2 Surface:- powder varnish-grey
Varnish black

3 Varnish on the inside not necessarily

4 Packaging
quantity 5 piece

~~PN 1.7 & 0.5~~

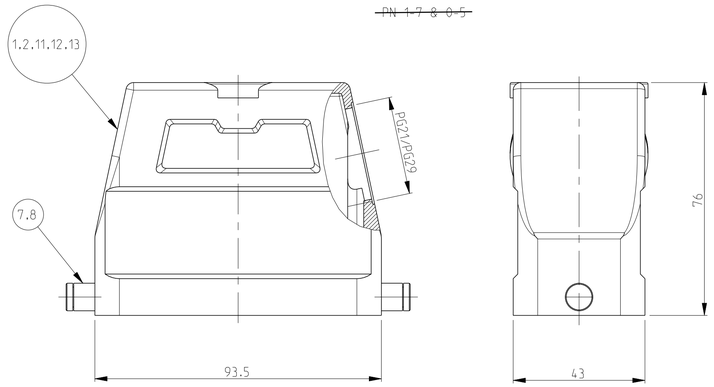

~~PN 0.3 & 0.6~~

5 Valid only for ~~PN 0.3 & 0.6~~
Landing at measure 72.5 (20mm Deep) milled off : bothsides

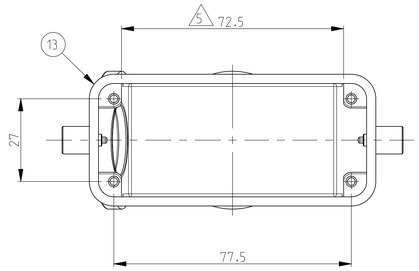

~~PN 1.1 & 2.1~~

SCALE 1:2

~~PN 1.3 & 2.3~~

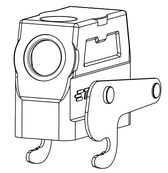

SCALE 1:2

PN ~~0.4, 0.1~~, 2-6 & ~~1.6~~

SCALE 1:2

~~PN 1.1 & 2.1~~

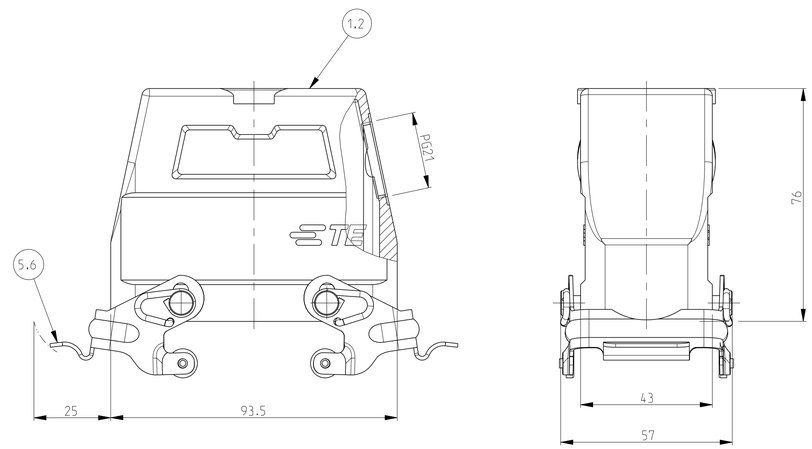

0-6	0-5	0-4	0-3	0-2	0-1	1-2	1-3	2-7	1-7	2-1	1-1	2-6	1-6	DESCRIPTION	MATERIAL	SURFACE	COLOR	ITEM NO	NOTES
														HD-K Hood	Aluminium	Aluminium oxide	Black	13	Landing machined 5
		1	1											HD Hood	Aluminium	-	Grey	12	With out PG/with out TE-logo
					1									HD Hood	Aluminium	-	Grey	11	With out PG
							1							ZB-Central clip	Stainless Steel	-	-	10	-
								1						ZB-Central clip	Steel	Zinc plated	Blue	9	-
2			2						2					LB-Clip bolt	Stainless Steel	-	-	8	-
	2			2						2				LB-Clip bolt	Steel	Zinc plated	Blue	7	-
											2			VS-Locking clip	Stainless Steel	-		6	-
												2		VS-Locking clip	Steel	Zinc plated	Blue	5	-
													4	VS-Clip bolt	Stainless Steel	-		4	-
		4			4								4	VS-Clip bolt	Steel	Zinc plated	Blue	3	-
						1		1		1		1		HD-K Hood	Aluminium	Aluminium oxide	Black	2	-
							1		1		1		1	HD Hood	Aluminium	-	Grey	1	-

5 5

ORDERING TEXT

~~HD.40.STS.1.21.G~~
HD-K.40.STS.1.21.G
~~HD.40.STS-VS.1.21.G~~
~~HD-K.40.STS-VS.1.21.G~~
~~HD.40.STS-GR.1.21.G~~
~~HD-K.40.STS-GR.1.21.G~~
~~HD-Z.40.STS-ZB.1.21.G~~
~~HD-K/Z.40.STS-ZB.1.21.G~~
~~HD.40.ST~~
~~HD.40.ST-GR~~
~~HD-K.40.STS-GR.1.21.G~~
~~HD.40.ST~~
~~HD.40.ST-GR~~
~~HD-K.40.STS-GR.1.21.G~~

THIS DRAWING IS A CONTROLLED DOCUMENT.

DIMENSIONS: mm

TOLERANCES UNLESS OTHERWISE SPECIFIED: ANGLE ±0.25 deg. LINEAR MINUS
0 PLC ±
1 PLC ±
2 PLC ±
3 PLC ±
4 PLC ±
ANGLES ±

MATERIAL

FINISH

DWN Schneider 19.12.1997
CHK Kramer 26.06.1998
APVD -
PRODUCT SPEC -
APPLICATION SPEC -
WEIGHT

TE Connectivity

NAME HOOD
HD.40.STS.1.21.G/1.29.G

SIZE	CAGE CODE	DRAWING NO	RESTRICTED TO
A1	00779	C-1102564	

CUSTOMER DRAWING

SCALE	SHEET	OF	REV
1:1	1	1	A12

4805 (3/13)