THIS DRAWING IS UNPUBLISHED. RELEASED FOR PUBLICATION 20
© COPYRIGHT 20 ALL RIGHTS RESERVED.

LOC	DIST
J	

REVISIONS 改訂

P	LTR	DESCRIPTION	ECN	DATE	DWN	APVD
	A	REVISED	FJA0-0009-05	06JAN2005	YK	SI
	A1	REVISED	ECR-06-003256	09FEB06	AY	HY
	B	REVISED	ECR-09-023330	26NOV09	TS	KB
	B1	REVISED	ECR-16-008655	15JUN2016	TS	HY

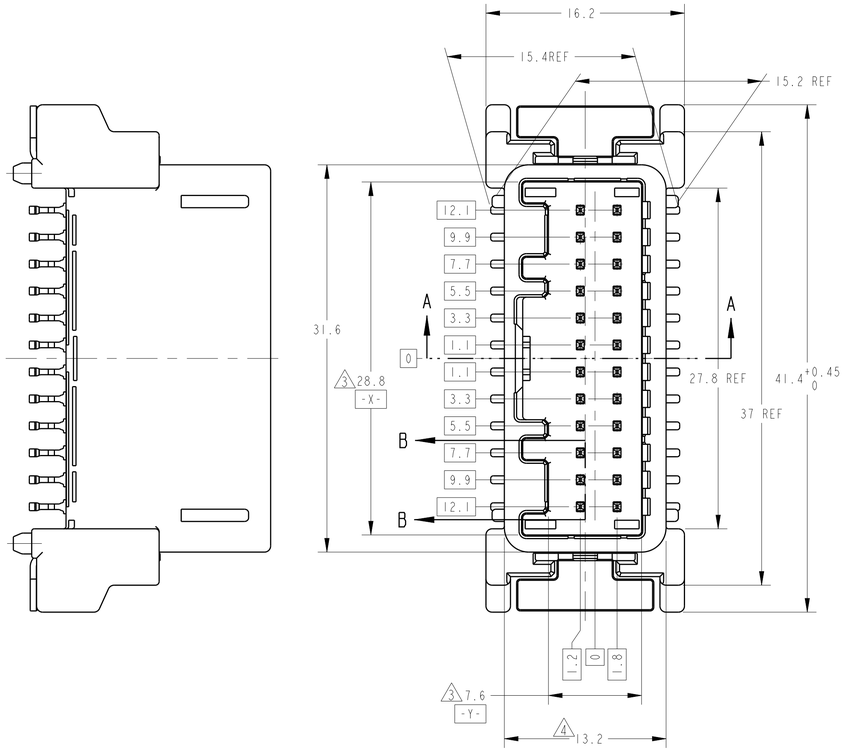

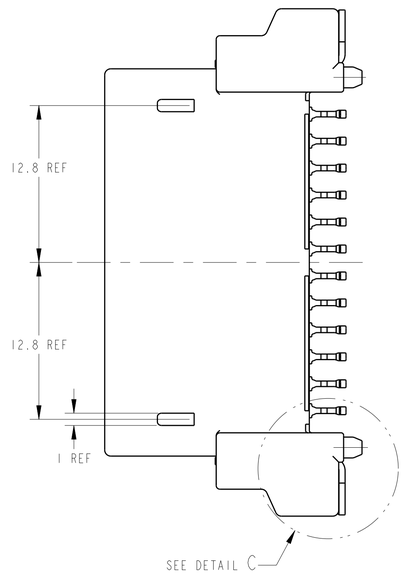

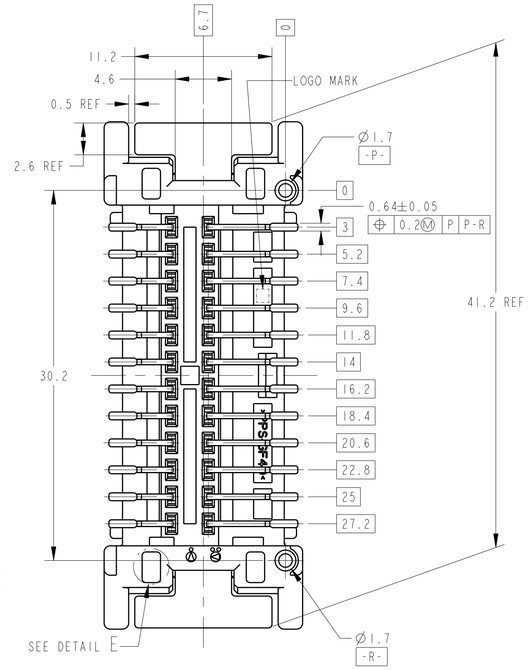

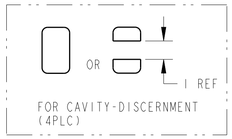

DETAIL E
SCALE 6:1

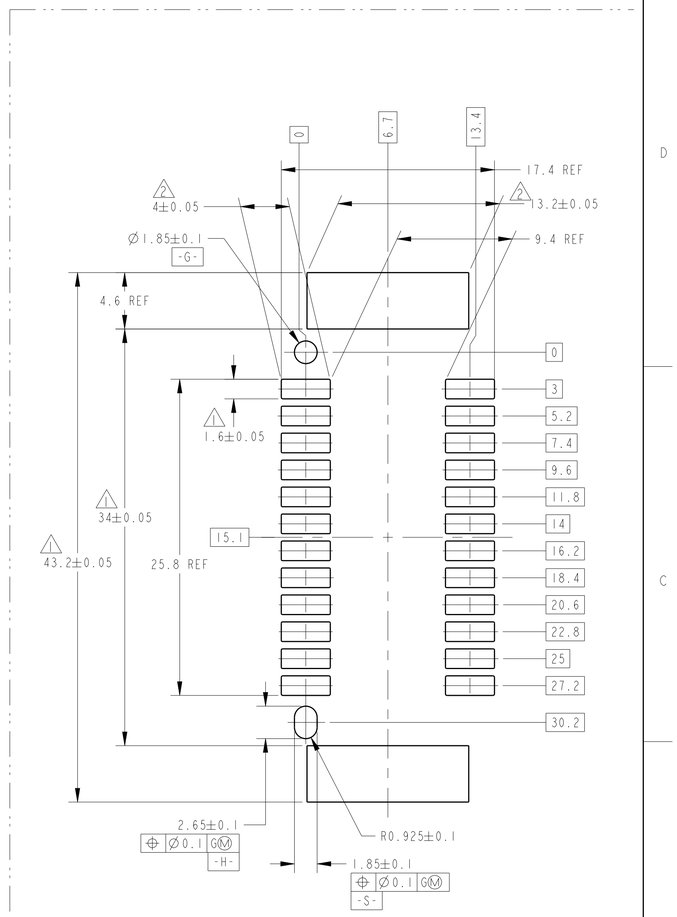

推奨基板寸法図 RECOMMEND P.C.B DIMENSIONS

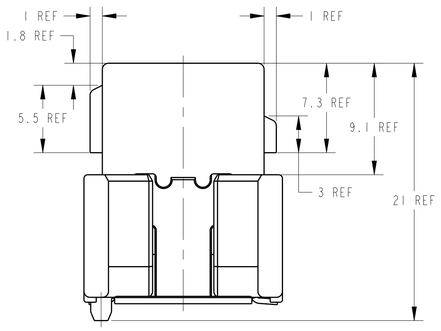

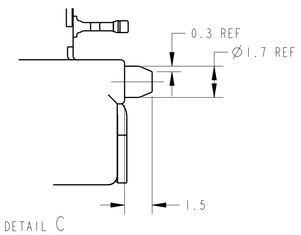

DETAIL C
SCALE 6:1

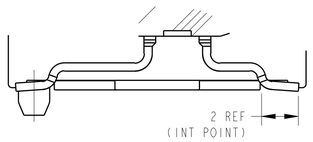

DETAIL D
SCALE 6:1

TABLE-2

POS. 極数	FINISH	TYPE
24	TIN	0.64

TABLE-1

POS. 極数	TYPE	P/N
24	0.64 CRIMP	1318917
24	0.64III CRIMP	1717112
24	0.64 IDC	1473803

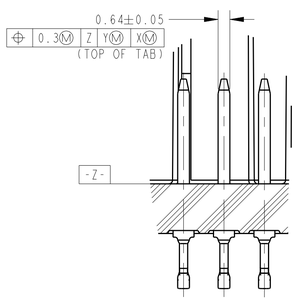

B-B
SCALE 6:1

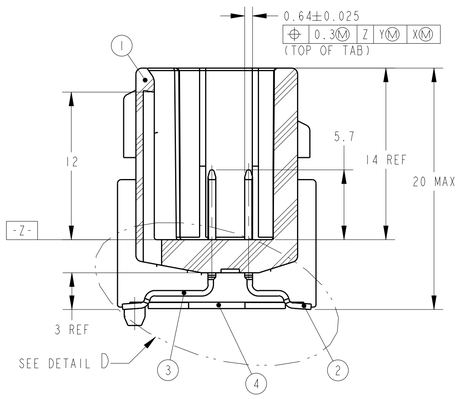

A-A

1. Ⓐ Ø0.1Ⓢ G G-H を適用すること
2. Ⓐ Ø0.1Ⓢ G G-S を適用すること
3. -Z- 面より6mmの位置で測定
4. 最大寸法で管理
5. 嵌合相手コネクタ品番：TABLE-1 参照
6. 端子構成：TABLE-2 参照
7. 本製品の取扱は取扱説明書No.411-78145に従うこと
8. 適用基板の厚さは1.6mm
9. 実装時の半田ペーストの厚さは0.15mm以上

1. POSITION TOLERANCE Ø0.1Ⓢ G G-H
2. POSITION TOLERANCE Ø0.1Ⓢ G G-S
3. MEASURED AT 6mm FROM -Z-
4. MUST BE CONTROLED AT MAXIMUM DIMENSION
5. MATING CONNECTOR PART NO.:SEE TABLE-1
6. DETAIL OF TERMINALS:SEE TABLE-2
7. HANDLING OF THIS PART SHOULD FOLLOW INSTRUCTION SHEET NO.411-78145
8. APPLICABLE PRINTED CIRCUIT BOARD'S THICKNESS 1.6mm
9. WHEN MOUNTING, THICKNESS OF SOLDER PASTE;0.15mm MIN.

OUTER 外装	PAPER BOX ダンボール箱	PAPER BOX ダンボール箱	PLASTIC BOX 通い箱	PACKING STYLE 梱包形態		
INNER 内装	TRAY トレイ	PLASTIC TUBE プラスチックチューブ	PLASTIC TUBE プラスチックチューブ			
	SAME AS 1717394-1	SAME AS 1717394-1	2	SOLDER PEG	POST-TIN	4
			12	0.64 TAB CONTACT (L)	POST-TIN	3
			12	0.64 TAB CONTACT (S)	POST-TIN	2
			1	24P CAP HOUSING	BLACK	1
	1717394-3	1717394-2	1717394-1	NAME	FINISH/COLOR	NO.

THIS DRAWING IS A CONTROLLED DOCUMENT.

DIMENSIONS: 寸法: 単位: mm

TOLERANCES UNLESS OTHERWISE SPECIFIED:
一般公差 ±0.3
0 PLC ±
1 PLC ±0.3
2 PLC ±0.10
3 PLC ±0.001
4 PLC ±0.0001
ANGLES ±3°

MATERIAL 材料: HOUSING ; PPS GF40
CONTACT ; BRASS
SOLDER PEG ; BRASS

FINISH 仕上: SEE TABLE -

DWN Y.KAWAHARA 21SEP2004
CHK H.YAMAGAMI 21SEP2004
APVD S.ISOHATA 21SEP2004
PRODUCT SPEC 製品規格
APPLICATION SPEC 適用業界規格 114-5250,-5329,-5276
WEIGHT 重量 8.3 g

TE Connectivity

NAME 名称 0.64 SMD CONNECTOR 24 POSITION CAP ASSEMBLY V-TYPE

SIZE A1 | CAGE CODE | DRAWING NO 図番 C-1717394 | RESTRICTED NO -

CUSTOMER DRAWING | SCALE 尺度 4:1 | SHEET 1 OF 1 | REV B1

4805 (3/11)