THIS DRAWING IS UNPUBLISHED. RELEASED FOR PUBLICATION – –, .
© COPYRIGHT – BY TYCO ELECTRONICS CORPORATION. ALL RIGHTS RESERVED.

| LOC | DIST |
|---|---|
| HT | 00 |

REVISIONS

| P | LTR | DESCRIPTION | DATE | DWN | APVD |
|---|---|---|---|---|---|
| | 0 | | 28APR05 | HXF | DF |

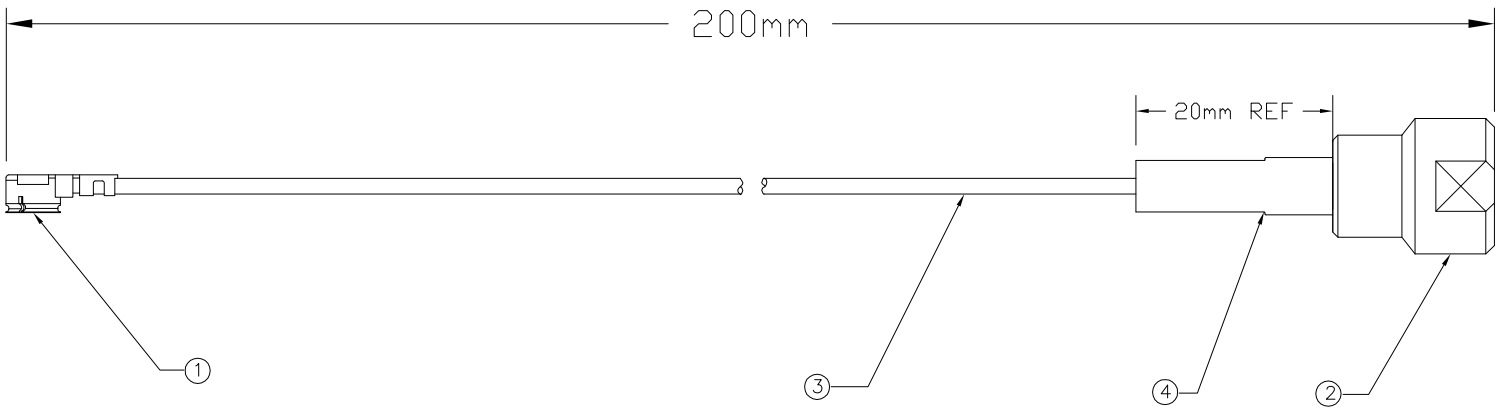


NOTES:
1. HIROSE COMPATIBLE
2. 100% ELECTRICAL TESTING FOR:
   CONTINUITY AND SHORTS. HI–POT AT 150 VDC FOR 100ms
   FREQUENCY RANGE: DC TO 2 GHz
   VSWR 1.3:1 MAX
3. PRODUCT RATINGS:
   TEMPERATURE: –40 TO +90 DEG.C
   VOLTAGE: 60 VAC
   CHARACTERISTIC IMPEDANCE: 50 OHMs
   UMCC MATING DURABILITY: 30 CYCLES
   FME MATING DURABILITY: 500 CYCLES

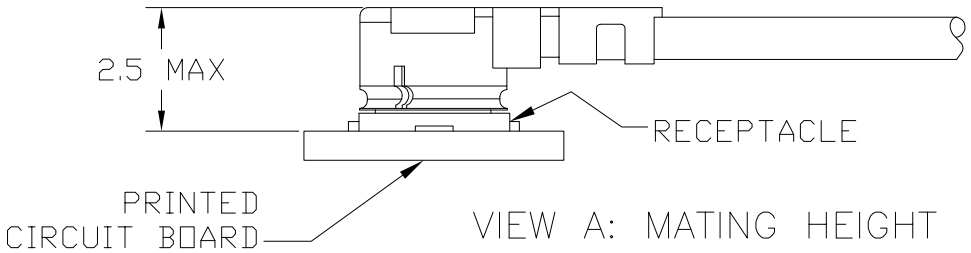


VIEW A: MATING HEIGHT

| QUTY | UNIT | DESCRIPTION | ITEM |
|---|---|---|---|
| 1 | PC | TUBING, HEAT SHRINK | 4 |
| AR | MM | MINIATURE COAX CABLE, 1.37mm OD | 3 |
| 1 | PC | FME PLUG FOR 1.37 OD CABLE | 2 |
| 1 | PC | UMCC TYPE III PLUG | 1 |

THIS DRAWING IS A CONTROLLED DOCUMENT.

DIMENSIONS: MM

TOLERANCES UNLESS OTHERWISE SPECIFIED:
0 PLC ±
1 PLC ±
2 PLC ±
3 PLC ±
4 PLC ± –
ANGLES ±

MATERIAL –
FINISH –

DWN Hao Xiangfeng 28APR05
CHK Paul Zhou 28APR05
APVD DENVER WILSON 13JUN05
PRODUCT SPEC –
APPLICATION SPEC
WEIGHT –

tyco Electronics
Tyco Electronics Corporation
KunShan, CHINA 215321

NAME
CABLE ASSY, UMCC TYPE III PLUG TO
FME PLUG ON 1.37mm CABL

| SIZE | CAGE CODE | DRAWING NO | RESTRICTED TO |
|---|---|---|---|
| A4 | 00779 | C-1750110-2 | – |

SCALE 1:1 SHEET 1 OF 1 REV 0

AMP 1470-19 REV 31MAR2000
10MAR05 16:00 JD002574