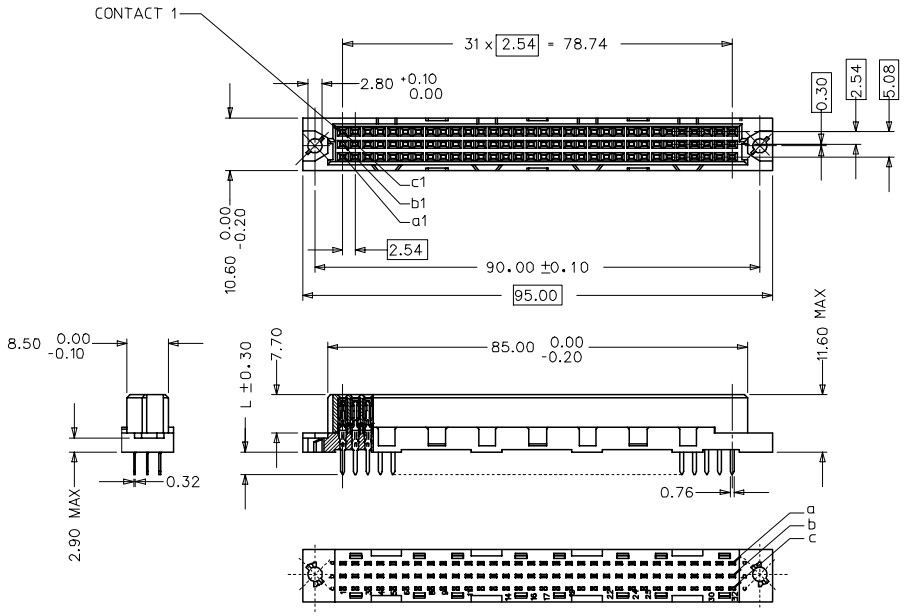

WITH MOUNTING CLIPS

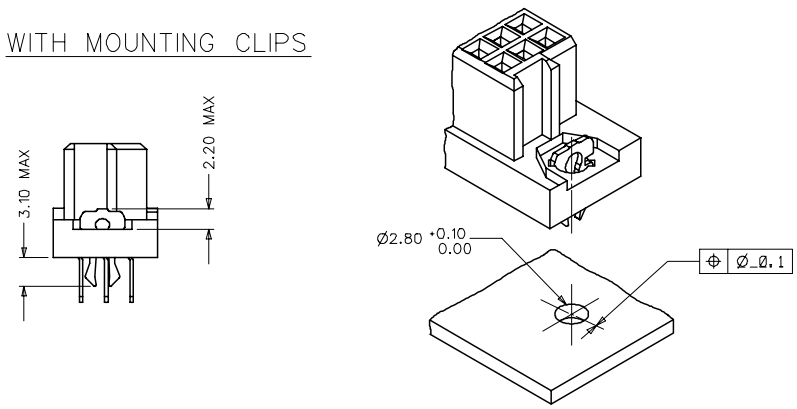

NOTES:

1) MATERIALS: THERMOPLASTIC POLYESTER,GLASS FILLED,
   UL94V-0.COLOUR: PEBBLE GREY RAL 7032
   TERMINAL - PHOSPHOR BRONZE
   MOUNTING CLIP: STEEL
2) FINISH: TERMINAL:-
   CONTACT AREA
   1. PERFORMANCE LEVEL 1: SELECTIVE GOLD (Au), THICKNESS = 1.1 MICROMETER
      OVER NICKEL, THICKNESS = 1.5 MICROMETER
   2. PERFORMANCE LEVEL 2: SELECTIVE GOLD (Au), THICKNESS = 0.6 MICROMETER
      OVER NICKEL, THICKNESS = 1.5 MICROMETER
   3. PERFORMANCE LEVEL 3: SELECTIVE GOLD (Au), THICKNESS = 0.3 MICROMETER
      OVER NICKEL, THICKNESS = 1.5 MICROMETER
      TERMINATION AREA:
      SELECTIVE TIN, THICKNESS = 5 MICROMETER
      OVER NICKEL, THICKNESS = 1.5 MICROMETER OVERALL
3) MOUNTING CLIP:-
   TIN (Sn), THICKNESS = 5-10 MICROMETER,
   OVER NICKEL (Ni), THICKNESS = 2.5 MICROMETER
4) FOR NON MOUNTING CLIP OPTION, CONNECTOR TO BE SECURED WITH
   RIVETS: 2 TUBULAR RIVETS 2.5 x 0.3 ... DIN 7340
   SCREWS: 2 CHEESEHEAD SCREWS M2.5 x .... DIN 84 AND 2 HEXAGONAL NUTS M2.5 DIN 934
5) MATERIAL No, BATCH CODE, UL AND CSA MARKING TO BE PRINTED ON THE CONNECTOR.
6) CUT FACES OF TIP WITHOUT PLATING PERMITTED.
7) PRODUCT SPECIFICATION PS:36500-001

RECOMMENDED PCB LAYOUT
COMPONENT SIDE

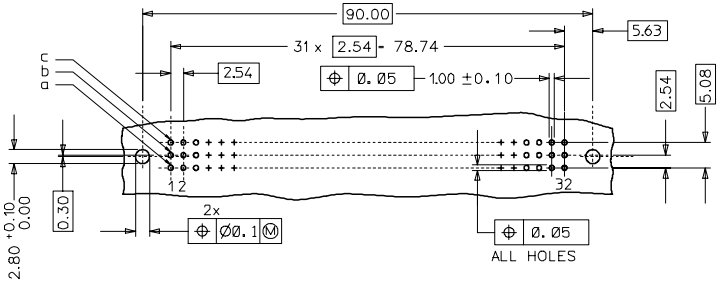

RoHS COMPLIANT

ENTER DESCRIPTION EC NO: 12007-0193 DRWN:SUREN.G 2007/01/08 CHKD:KPRASAD 2007/01/08 APPR:KPRASAD 2007/01/09 DESCRIPTION	QUALITY SYMBOLS ▼=0 ▽=0	GENERAL TOLERANCES (UNLESS SPECIFIED) mm / INCH 4 PLACES ± --- / ± --- 3 PLACES ± 0.05 / ± --- 2 PLACES ± 0.1 / ± --- 1 PLACE ± 0.15 / ± --- ANGULAR ± 2 ° DRAFT WHERE APPLICABLE MUST REMAIN WITHIN DIMENSIONS	DIMENSION STYLE MM ONLY DRAWN BY SSUDHIR DATE 2000/09/22 CHECKED BY G.L DATE 2000/09/22 APPROVED BY G.L DATE 2000/09/22 MATERIAL NO. 85042-0001	SCALE 2:1	DESIGN UNITS METRIC	THIRD ANGLE PROJECTION	
REV A				TITLE ASSEMBLY DIN 41612 C FEMALE 96 POS 1.0MM PCB DIA			
				molex MOLEX INCORPORATED			
				DOCUMENT NO. SD-85042-0001		SHEET NO. 1 OF 1	
				SIZE A1	THIS DRAWING CONTAINS INFORMATION THAT IS PROPRIETARY TO MOLEX INCORPORATED AND SHOULD NOT BE USED WITHOUT WRITTEN PERMISSION		

tb_frame_A1_P_ME_T
Rev. D 2004/04/02

View on mating side

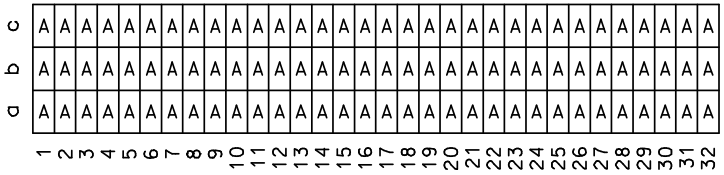

A = 96 standard contacts L=4.5

Marking	Standard
Performance level	G3/0 = Contact area level3 / Termination tin
Flux proof	no
Fixing clip	no
Dimensions	SD-85042-0001 sht.1
Technical Data	PS-85042-0001

A	G3/0	a1-32 b1-32 c1-32
Contact symbol	Perform. level	Contact position number

ENTER DESCRIPTION
EC NO: I2008-0396
DRWN:S.J 2008/02/14
CH'KD:KPRASAD 2008/02/14
APPR:KPRASAD 2008/02/15
DESCRIPTION
REV B

QUALITY SYMBOLS
▼=0
▽C=0

GENERAL TOLERANCES (UNLESS SPECIFIED)

	mm	INCH
4 PLACES	± ---	± ---
3 PLACES	± ---	± ---
2 PLACES	± ---	± ---
1 PLACE	± ---	± ---
ANGULAR ±---°		

DRAFT WHERE APPLICABLE MUST REMAIN WITHIN DIMENSIONS

DIMENSION STYLE: IN/MM
SCALE: ---
DESIGN UNITS: INCH
THIRD ANGLE PROJECTION

DRAWN BY DATE
CHECKED BY DATE
APPROVED BY DATE

TITLE

molex

MATERIAL NO. 850426062
DOCUMENT NO. SD-85042-6062
SHEET NO. 1 OF 1
SIZE A3

THIS DRAWING CONTAINS INFORMATION THAT IS PROPRIETARY TO MOLEX INCORPORATED AND SHOULD NOT BE USED WITHOUT WRITTEN PERMISSION

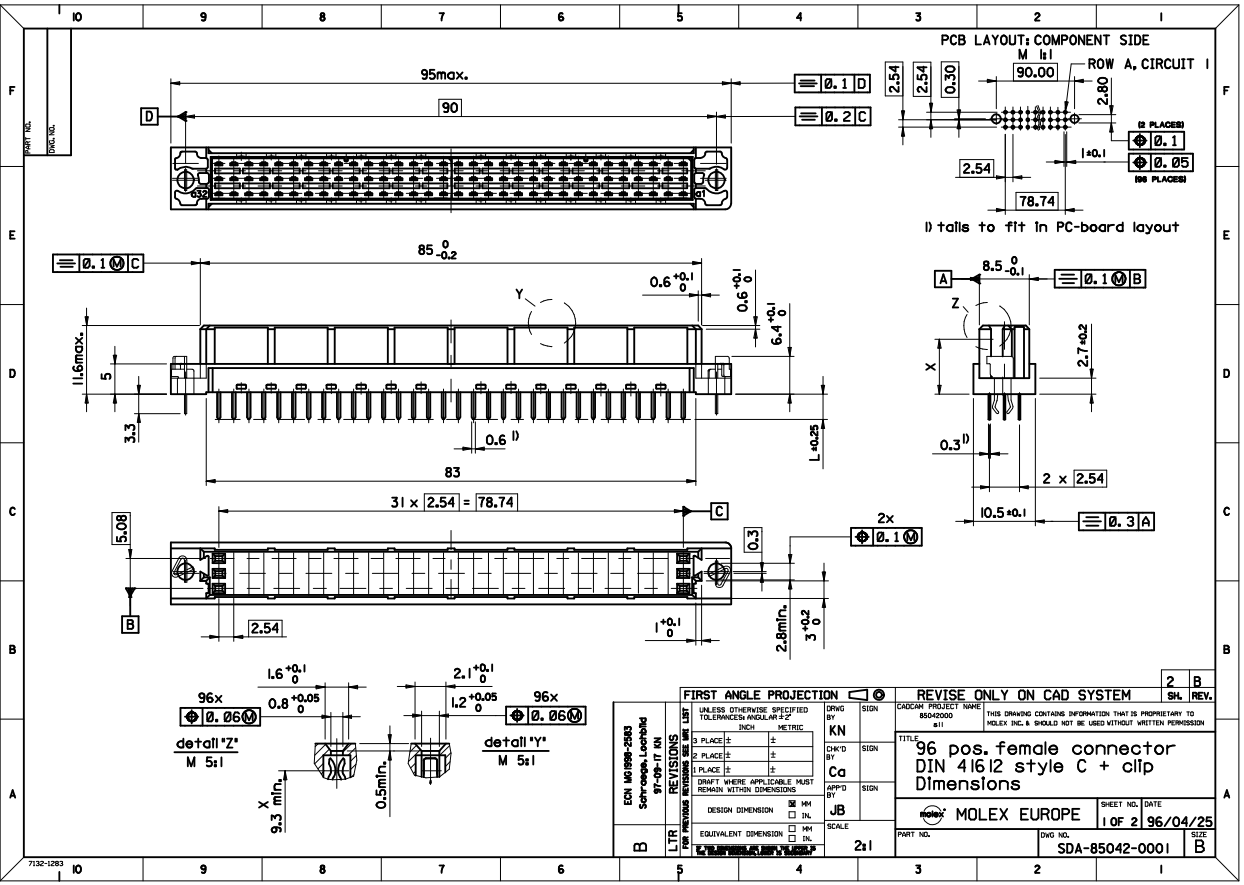

SHT. 1 OF	MR1-

MODIFICATION RECORD INDEX

ECN	ISS.	DATE	INIT.	SHTS. AFFECTED	DESCRIPTION OF MOD.
2213	A	96.04.26	KN	1 / 2	first release
2253	A1	96.10.01	KN	1	Kontur ueber Rastfenster
2583	B	97.09.17	KN	1	Schraege im Flanschbereich Lochbild

MOLEX EUROPE | REVISE ONLY ON CAD SYSTEM

THIS DRAWING CONTAINS INFORMATION THAT IS PROPRIETARY TO MOLEX INC. & SHOULD NOT BE USED WITHOUT WRITTEN PERMISSION MF0028 | CADCAM FILENAME | ISSUE

LEVEL CHART

1	17	33	49
2	18	34	50
3	19	35	51 LEVEL INDEX
4	20	36	52 RESERVED
5	21	37	53 RESERVED
6	22	38	54 Inspection Balloons
7	23	39	55 DIMENSIONS
8	24	40	56 TABLES/CHARTS
9	25	41	57 REVISION TEXT & MR1
10	26	42	58 Notes/text - English
11	27	43	59 Bill of materials
12	28	44	60 notes/text - german
13	29	45	61
14	30	46	62 notes/text - french
15	31	47	63 RESERVED
16	32	48	

VIEW ON MATING SIDE

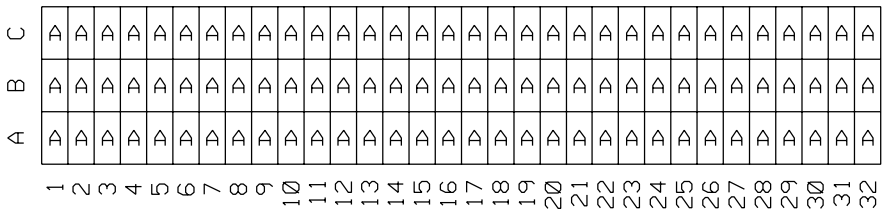

A = 96 STANDARD CONTACTS L=4,5

Marking	Standard
Performance level	G3/0 = Contact area level3 / Termination tin
Flux proof	no
Fixing clip	no
Dimensions	SDA-85042-0001 sht.1
Technical Data	PS-85042-0001

A	G3/0	a1-32 b1-32 c1-32
Contact symbol	Perform. level	Contact position number

LTR	REVISIONS	FOR PREVIOUS REVISIONS SEE MRI LIST
A	ECN 2348 first release	

UNLESS OTHERWISE SPECIFIED TOLERANCES: ANGULAR ±2°

	INCH	METRIC
3 PLACE	± .	±
2 PLACE	± .	±
1 PLACE	± .	±

DRAFT WHERE APPLICABLE MUST REMAIN WITHIN DIMENSIONS

DESIGN DIMENSION ☐ MM ☐ IN.

EQUIVALENT DIMENSION ☐ MM ☐ IN.

IF TWO DIMENSIONS ARE SHOWN THE UPPER IS THE DESIGN DIMENSION, LOWER IS SECONDARY

DRWG BY	KN	SIGN
CHK'D BY	Ca	SIGN
APP'D BY	JB	SIGN
SCALE		

REVISE ONLY ON CAD SYSTEM | SH. | REV.

CADCAM PROJECT NAME s8504260 s61

THIS DRAWING CONTAINS INFORMATION THAT IS PROPRIETARY TO MOLEX INC. & SHOULD NOT BE USED WITHOUT WRITTEN PERMISSION

TITLE

96 pos. female connector acc. DIN 41612 style C contacts arrangement

molex MOLEX EUROPE

SHEET NO. 1 OF 1

DATE 96/12/05

PART NO. 85042-6062

DWG NO. SDA-85042-6062

SIZE A