Tolerances	Revisions Description/Approved/Date	Approved	Date
1-20=+/-0.2		M.H.	07/14/99
20-30=+/-0.3		Checked M.H.	Date 07/14/99
30-40=+/-0.4		Drawn K.R.E.	Date 07/14/99
40-50=+/-0.5			
50-100=+/-0.75			
100-300=+/-1.5			
Angles=+/-1			
Dimensions are in Millimeters			

NOTES (plating thickness in micro-inches):
1. Per QQ-B-626
2. Per QQ-S-764
3. Per QQ-C-530
4. Per QQ-B-750
5. Per MIL-P-19468
6. Per ZZ-R-765
7. Per WW-T-799
8. Gold pl. 50 min. over nickel pl. 50 min. over copper strike
9. Nickel pl. 100 min. over copper strike
10. Per QQ-P-35
11. Gold pl. 30 min. over nickel pl. 50 min. over copper strike

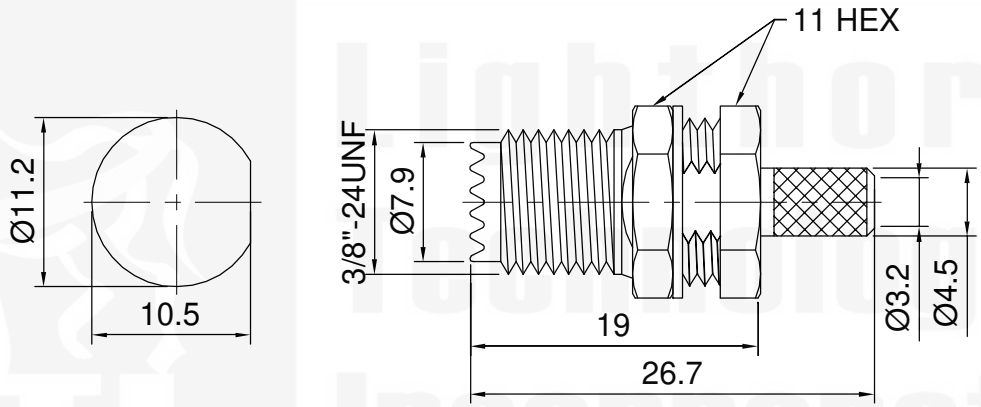

ITEM	MATERIAL	FINISH
Connector Body	Brass, Note 1	Nickel, Note 9
Center Contact: Female	Beryllium Copper, Note 3	Gold, Note 11
Insulation	Teflon, Note 5	None
Ferrule	Annealed Copper, Note 7	Same as body
Gasket	--	--
Hex Nut	Brass, Note 1	Same as body
Lock Washer	Brass, Note 1	Same as body

Lighthorse Technologies, Inc.
4907 Morena Boulevard, #1411
San Diego, California 92117

Part Number: *LTI-MSF13NT-58*

Description
Mini-UHF Bulkhead Crimp Jack for RG-58

Scale	Drawing No.	File Name
2:1	M/MSF13	MSF13