THIS DRAWING IS UNPUBLISHED. RELEASED FOR PUBLICATION -.- .
© COPYRIGHT - By - ALL RIGHTS RESERVED.

REVISIONS					
P	LTR	DESCRIPTION	DATE	DWN	APVD
	R2	REVISED PER ECR-17-001577	03FEB2017	LN	RS

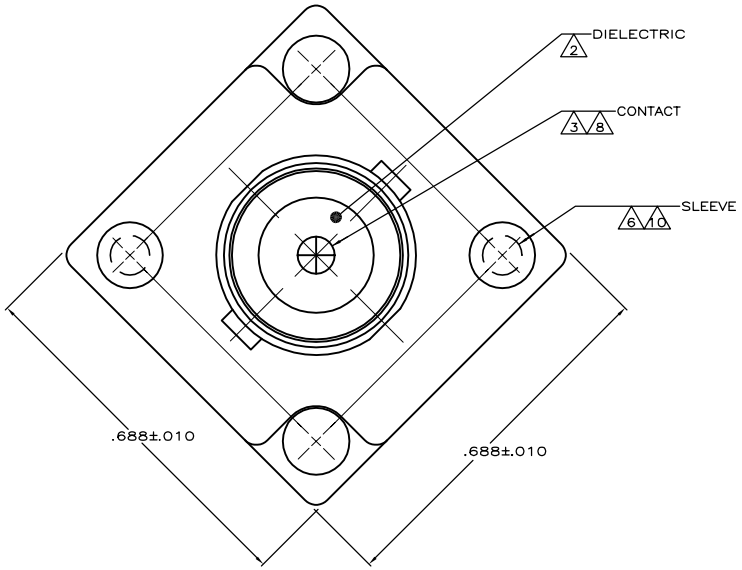

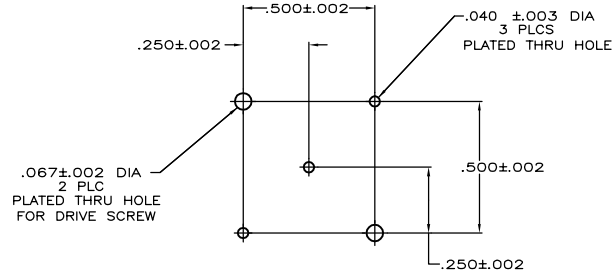

PCB CONFIGURATION
SCALE 4:1

1. ZINC PER QQ-Z-363
2. PTFE PER MIL-P-19468
3. BERYLLIUM COPPER PER QQ-C-530
4. COPPER NICKEL ALLOY PER ASTM-B-122
5. STAINLESS STEEL PER ASTM-A-582
6. BRASS PER QQ-B-626
7. NICKEL PLATE PER QQ-N-290, .000200 MINIMUM THICKNESS
8. GOLD PLATE PER MIL-G-45204, .000030 - .0000055 MINIMUM THICKNESS
9. PASSIVATE PER QQ-P-35
10. TIN PLATE PER ASTM-B-545, .000100 - .000200 MINIMUM THICKNESS
11. PREPARE BOARD AND TERMINATE PER APPLICATION SPEC 114-12001
12. SEE INSTRUCTION SHEET 9194.
13. GOLD PLATE PER MIL-G-45204.

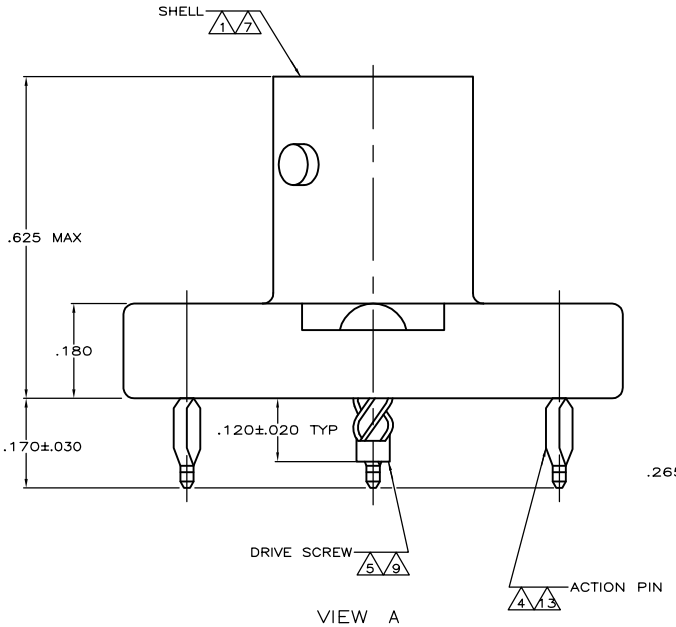

VIEW A

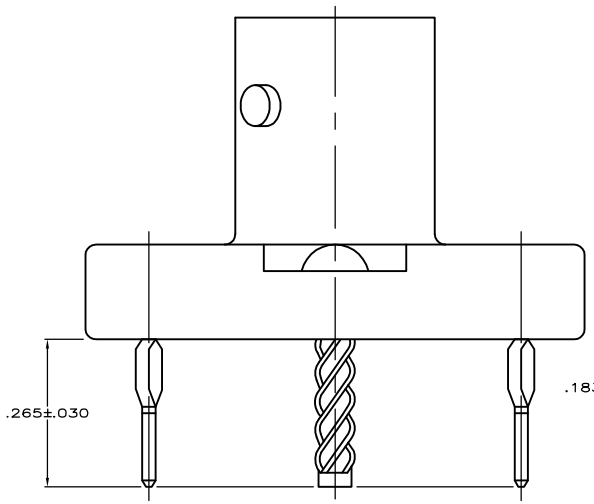

VIEW B
SAME AS VIEW A
EXCEPT AS SHOWN

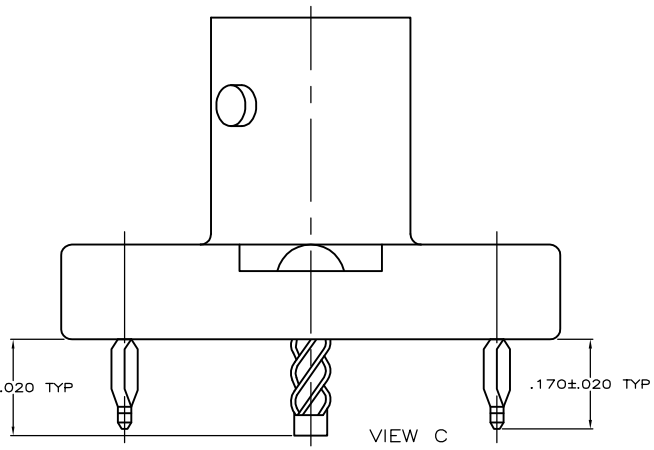

VIEW C
SAME AS VIEW A
EXCEPT AS SHOWN

OBSOLETE	B	221336-4
OBSOLETE	C	221336-3
OBSOLETE	C	221336-2
OBSOLETE	A	221336-1

THIS DRAWING IS A CONTROLLED DOCUMENT.

DIMENSIONS: INCHES

TOLERANCES UNLESS OTHERWISE SPECIFIED:
0 PLC ± -
1 PLC ± -
2 PLC ± -
3 PLC ± .008
4 PLC ± -
ANGLES ± -

MATERIAL -
FINISH -

DWN B. WERNER 7-2-90
CHK R. E. RUTH 7/23/90
APVD R. HENRY 7/23/90
PRODUCT SPEC 108-12103
APPLICATION SPEC -
WEIGHT 0.000000
CUSTOMER DRAWING

TE Connectivity

NAME VIEW
PART NUMBER
PLUG, PCB, BRASS FIT, 75 OHM, COMMERCIAL BNC
-

SIZE	CAGE CODE	DRAWING NO	RESTRICTED TO
A1	00779	C-221336	-

SCALE 8:1 SHEET 1 OF 1 REV R2

4805 (1/16)