SDP Series
Micro Mini Pendulum SMT Detect Switch

Features/Benefits

- ***SMT process compatible***
- ***Low profile***
- ***Right or left side actuated***
- ***Low actuation force***
- ***Low halogen / halogen free***

Typical Applications

- ***Consumer electronics***
- ***Computers***
- ***Medical devices***
- ***ATCA and MicroTCA devices***

Specifications

CONTACT RATING: 5 VDC 1mA (0.1mA to 100mA max)
MECHANICAL AND ELECTRICAL LIFE: 50,000 cycles
CONTACT RESISTANCE: 500 m Ω max. initial.
INSULATION RESISTANCE: 100 M Ω (500VDC for 1 min.)
OPERATING TEMPERATURE: -20ºC to + 70ºC
STORAGE TEMPERATURE: -30ºC to + 80ºC
PACKAGING: Tape & reel 4,550 pieces

Materials

BASE: LCP (black)
COVER: PA 46 (black)
ACTUATOR: LCP (black)
MOVABLE BLADE: Stainless Steel, Ag over Ni plating.
TERMINALS: Phosphor Bronze, Ag over Ni plating.
SOLDERABILITY: Lead free compatible - No clean.

NOTE: Specifications and materials listed above are for switches with standard options. For information on specific and custom switches, consult Customer Service Center.

Build-A-Switch

Complete part numbers for SDP Series are shown below.
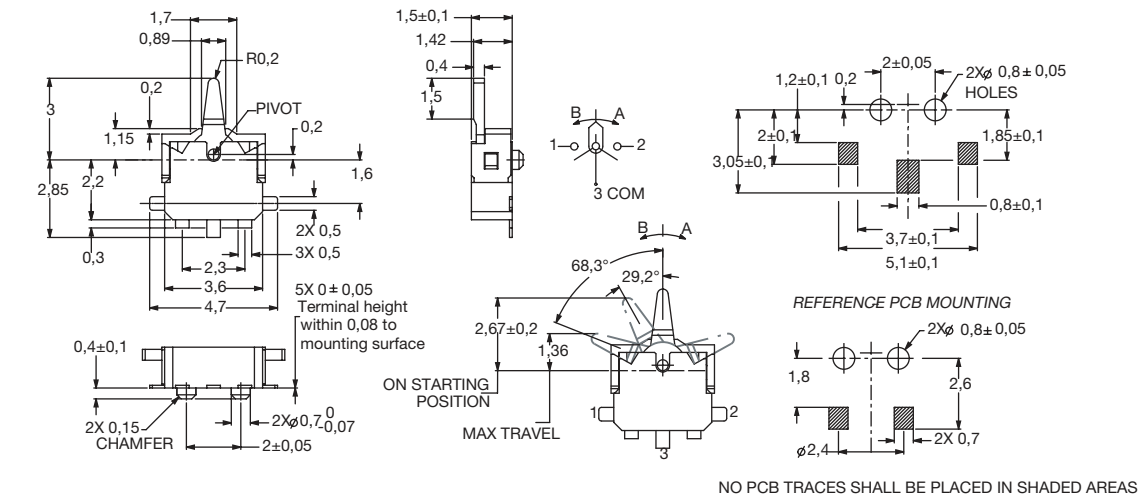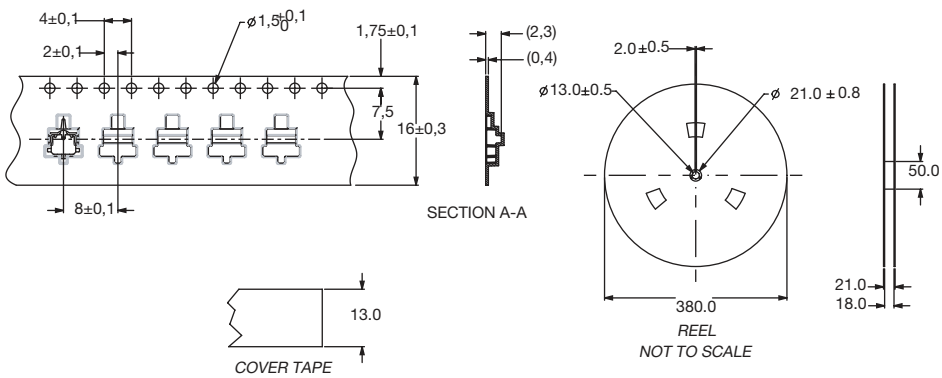
SDP002