MATERIALS AND FINISHES

BODY, CRIMP TUBE BRASS
PLATED GOLD

OUTER CONTACT BERYLLIUM COPPER
PLATED GOLD

CENTER CONTACT BERYLLIUM COPPER
PLATED GOLD

INSULATOR TEFLON

CRIMP USING .128 HEX DIE

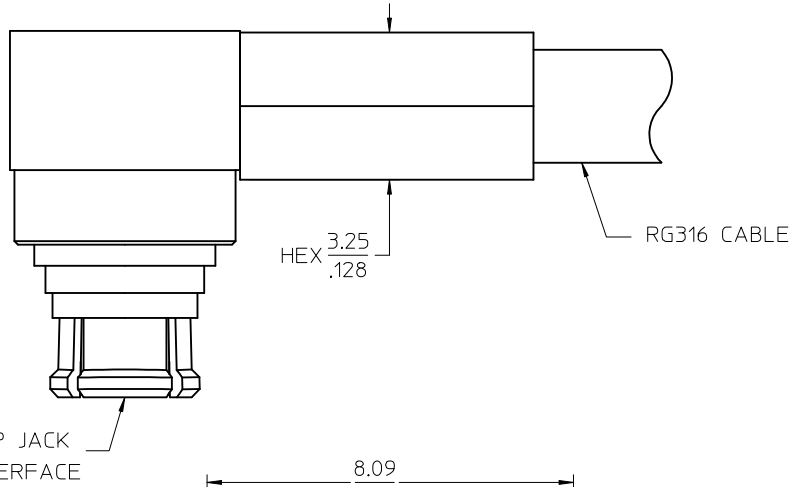

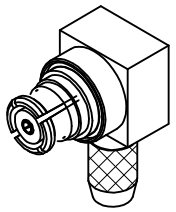

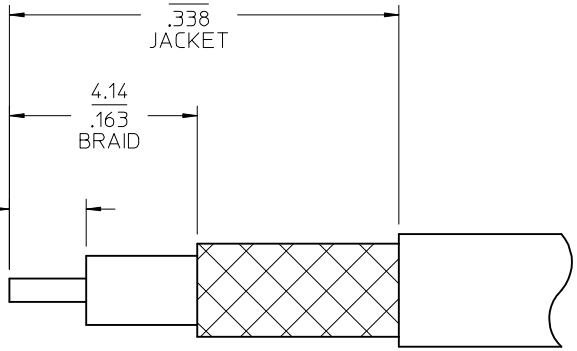

RECOMMENDED STRIP DIMENSIONS

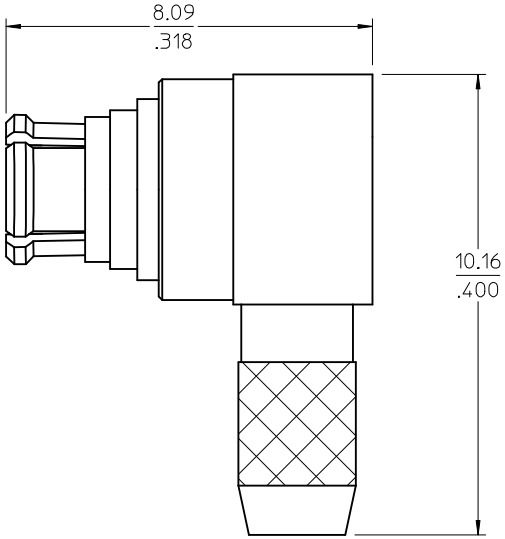

CAP

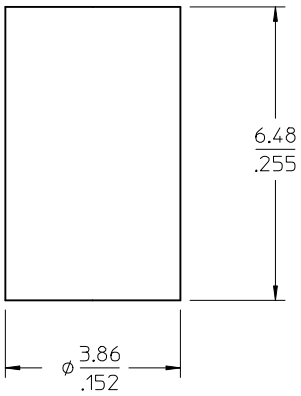

CRIMP TUBE

PART NO.	DESCRIPTION
73415-5034	73415-5033 W/GOLD FLASH BODY / STANDARD TRAY
73415-5033	GOLD 8u" MIN. / STANDARD TRAY (80 CAV.)
73415-5032	73415-5030 / SMALL TRAY (20 CAV.)
73415-5031	73415-5030 / ONE PER BAG
73415-5030	GOLD 10u" MIN. / STANDARD TRAY (80 CAV.)

SPECIFICATION	DESCRIPTION
MIL-STD-348A, FIG. 326.1	INTERFACE

CHG: UPDATE PACKAGING PER RF15-E204
EC NO: URF2015-0639 2015/05/15
DRWN:RYEH
CHKD:
APPR:YCHENG 2015/05/25
DESCRIPTION
REV B6

QUALITY SYMBOLS
E =0
E =0
E =0

GENERAL TOLERANCES (UNLESS SPECIFIED)

	mm	INCH
4 PLACES	± ---	± ---
3 PLACES	± ---	± ---
2 PLACES	± ---	± ---
1 PLACE	± ---	± ---
0 PLACE	±	±
ANGULAR ± 2 °		

DRAFT WHERE APPLICABLE MUST REMAIN WITHIN DIMENSIONS

DIMENSION STYLE: MM/IN
SCALE: 12:1
DESIGN UNITS: METRIC
THIRD ANGLE PROJECTION

DRAWN BY: TEF DATE:
CHECKED BY: SSS DATE: 2004/06/10
APPROVED BY: GMH DATE: 2004/06/10
MATERIAL NO.: SEE TABLE
SIZE: C

TITLE: SMP JACK R/A FOR RG316 50 OHMS EWR-2492 SMP-JC/RA

molex

DOCUMENT NO.: SD-73415-503
SHEET NO.: 1 OF 1

THIS DRAWING CONTAINS INFORMATION THAT IS PROPRIETARY TO MOLEX INCORPORATED AND SHOULD NOT BE NOT BE USED WITHOUT WRITTEN PERMISSION