REV. G	REVISIONS		
SYM	DESCRIPTION	DATE	APPROVED
E	18850 19210 CONNECTOR WAS PT02E-12-10P NOTE UPDATED	3-18-88	RS
F	21338 ADDED ITEMS 3 & 4	12-11-89	CG
G	41853 ITEM 5 ADDED	00-03-07	RS

FAA / PMA

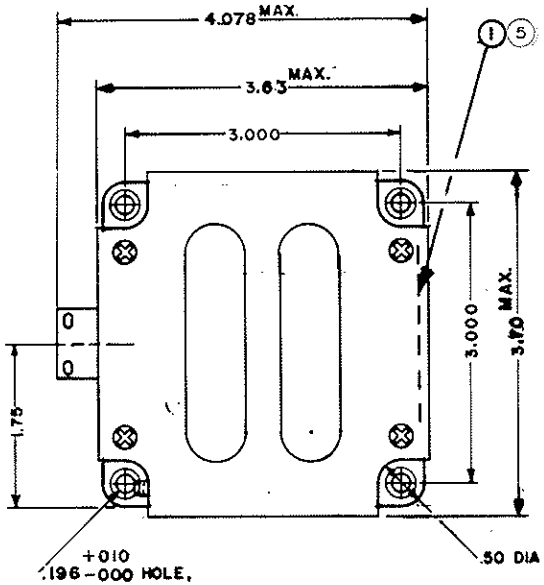

1 CONSTRUCT: ALUMINIM CASE, [illegible], GASKET SEALED, VENTED
2 NOMINAL INPUT VOLTS: 115 V L-N 400 CPS. 3 ϕ 4 WIRE
2.2 NO DAMAGE RESULTS WITH INPUT CONDITIONS PER MIL-E-24021A (WEP) PAR. 3.7.1
2.3 DIELECTRIC STRENGTH: LEAKAGE CURRENT WILL NOT EXCEED 0.001 AMPS WHEN UNIT IS SUBJECTED TO TEST OF PAR 4.6.2 OF MIL-E-24021A
3 ENVIRONMENT
3.1 TEMPERATURE -54°C TO +71°C OPERATING
3.2 ACCELERATION [illegible]g DE-ENERGIZED
3.3 ALTITUDE 0-40,000 FEET
3.4 SHOCK 100 30 ± 1 MS
3.5 VIBRATION 5-15.5 CPS ± 0.13g, 15.5-54 CPS 0.01 INCH DA 54-500 CPS ± 1.5g
3.6 NOISE OASPL 115 db
3.7 ATTITUDE UNIT IS OPERATIONAL IN ANY ATTITUDE
4.0 OPERATION CONTACTS WILL REMAIN AS SHOWN (OFF CONDITION) UNTIL INPUT POWER IS ANYWHERE WITHIN THE "ON" ZONE CONTACTS WILL REVERT TO OFF CONDITION WHENEVER INPUT VOLTAGE AND/OR FREQUENCY IS ABOVE THE HIGH SIDE OR BELOW THE LOW SIDE "OFF" LIMITS FOR TIME INTERVALS EXCEEDING THE TRANSIENT PERIOD

5.0 LIMITS
5.1 "ON" ZONE
5.1.1 "ON" ZONE VOLTAGE LIMITS 100 TO 120 VOLTS RMS ALL PHASES
5.1.2 "ON" ZONE FREQUENCY LIMITS 380 TO 420 CPS
5.2 "OFF" LIMITS
5.2.1.1 HIGH SIDE VOLTAGE "OFF" LIMITS 131 ± 5 VOLTS 3 ϕ (HIGHEST OF 3 ϕ)
5.2.1.2 HIGH SIDE FREQUENCY "OFF" LIMITS 425 ± 5 CPS
5.2.2.4 LOW SIDE FREQUENCY "OFF" LIMITS 375 ± 5 CPS
5.2.3 VOLTAGE TRANSIENT LIMITS
5.2.3.1 HIGH SIDE - ABOVE LIMIT 2 BUT BELOW LIMIT 1 OF FIG. 2 MIL-STD-704, 3ϕ (HIGHEST OF 3 ϕ)
5.2.3.2 LOW SIDE - BELOW LIMIT 3 FIG. 2 MIL-STD-704
5.2.4 OVER AND UNDER FREQUENCY TIME DELAY 3 ± 1 SEC
6.0 OUTPUT RATING SPST 3 AMP IND. 28 V DC/115 V 400 CPS
7.0 WEIGHT 12 OZ MAX
8.0 ADDITIONAL REQUIREMENTS
8.1 UNIT IS DUST TIGHT
8.2 FIRE: MATERIALS DO NOT SUPPORT COMBUSTION, ARE SELF EXTINGUISHING AND FREE OF AFTER GLOW
8.3 SMOKE: UNIT WILL NOT PRODUCE ANESTHETIC OR TOXIC FUMES OR SMOKE UNDER NORMAL OPERATION OR FAILURE
8.4 ELECTROMAGNETIC INTERFERENCE: MEETS REQUIREMENTS OF DAC 7914697
8.5 BONDING: MEETS REQUIREMENTS OF DAC 7916597
9.0 THIS UNIT MEETS THE REQUIREMENTS OF MIL-E-24021A EXCEPT AS MODIFIED HEREON

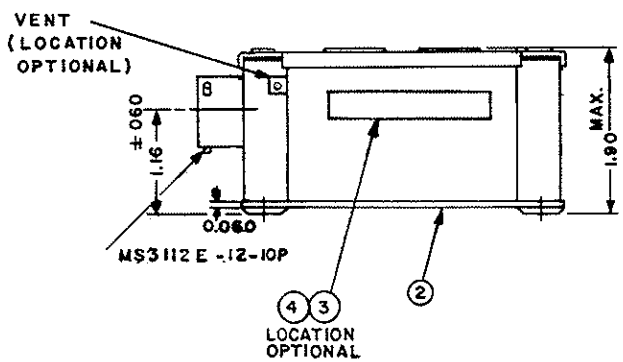

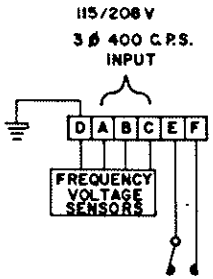

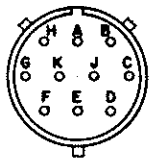

FACE VIEW OF CONNECTOR
2"=1"

WIRING DIAGRAM — 22919-1

QTY REQD	NOMENCLATURE OR DESCRIPTION	PART OR IDENTIFYING NO	ITEM NO
1	OVERLAY	39529-038	5
1	OVERLAY	39529-024	4
1	PLATE - FAA/PMA	58400-097	3
1	RELAY ASSEMBLY — PRIMARY	23492-010	2
1	PLATE-NAME PER DAC 7912000 TYPE I	23211-001	1

PARTS LIST

DATE 8-27-65 DR BY DEH
DESIGNED FOR
TOLERANCES UNLESS OTHERWISE SPECIFIED .00 ±.03 .000 ±.010
MATERIAL

HARTMAN ELECTRICAL MANUFACTURING
MANSFIELD, OHIO

MONITOR—EXTERNAL POWER

APPROVED RS
APPROVED EAD

CODE IDENT NO	SIZE	
74063	C	B-188MA-1

SCALE 1"=1" WEIGHT SHEET

B-188MA-1