Product NO.	BC-102-400			
REV	DESCRIPTION	DWN	DATE	APPROVEN
R1.0	First issue	Gavin	2021/03/09	JIM.KING

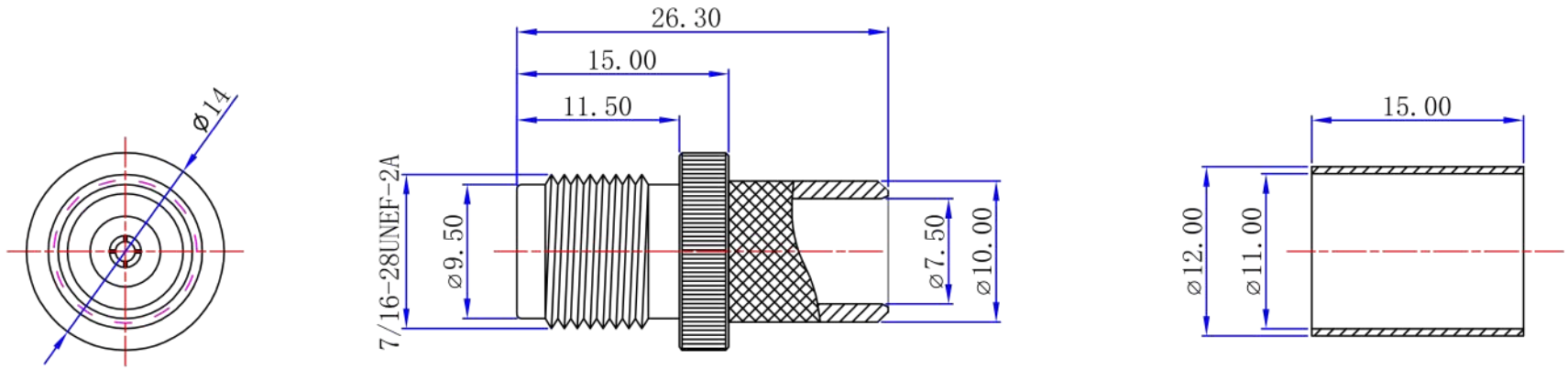

Specifications:
IMPEDANCE: 50 Ohms
Frequency range:0~6GHZ
VSWR:1.5MAX
Working voltage:500V rms @ sea level
Insulation resistance:5000 MOhms min
Temperature range:-40℃ TO +155℃

No	Connector color
BC-102-400-RD	Body electrophoresis: Red
BC-102-400-BL	Body electrophoresis: Blue
BC-102-400-BK	Body electrophoresis: Black

NO	DESCRIPTION	MATERIAL	FINISH	QTY
4	Copper pipe	BRASS	NICKEL	1
3	CONTACT PIN	BRASS	GOLD	1
2	INSULATOR	PTFE	NINE	1
1	BOOY	BRASS	Electrophoresis	1

-TOLERANCES-
UNLESS OTHERWISE SPECIFIED

UNLESS OTHERWISE SPECIFIED
TOLERANCES FOR MILLIMETERS ARE:
0.5 - 8mm ± 0.20mm
8 - 30mm ± 0.25mm
30 -120mm ± 0.30mm

BIG CAT CABLES

PART DESCRIPION:
Female TNC JACK FOR LMR400 CABLE

Appd: JIM.KING	P/N: BC-102-400				
Check:	Date	Scale	Unit	Type	Page
Draw: Gavin	2021.03.09	Free	MM	Z	1/1