BS,C ,202498,010	D

GEN. ST.	01	02	03	04	05	06	07	08	0D	50	60	70	80	90
INT. ST.	10 11 12 13 14 18 20 31 32 33 34 38 39 40 42 43 44 45 46 48 56 70 72 73 75 76 81 82 83 84 88													

REV.	DATE	DESCRIPTION	BY	C'K'D'
A	2001-09-14	CONVERSION REVISION 02	KN	
B	2002-02-12	EC B20030	MF	
C	2005-11-10	105-0229	ALEX B	BKP
D	2006-08-08	106-0144	VIVEK	BKP

LOADING PATTERN MATING SIDE

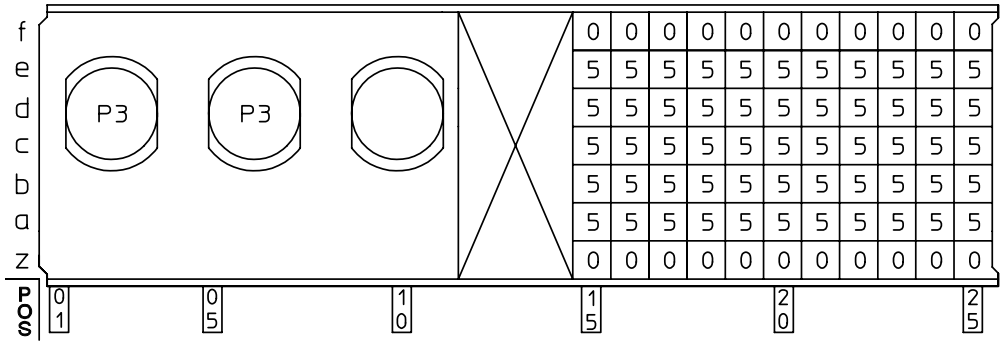

0	0	0	0	0	0	0	0	0	0	0
5	5	5	5	5	5	5	5	5	5	5
5	5	5	5	5	5	5	5	5	5	5
5	5	5	5	5	5	5	5	5	5	5
5	5	5	5	5	5	5	5	5	5	5
5	5	5	5	5	5	5	5	5	5	5
0	0	0	0	0	0	0	0	0	0	0

LOADED CONNECTOR ASSEMBLY
(FOR EXAMPLE)

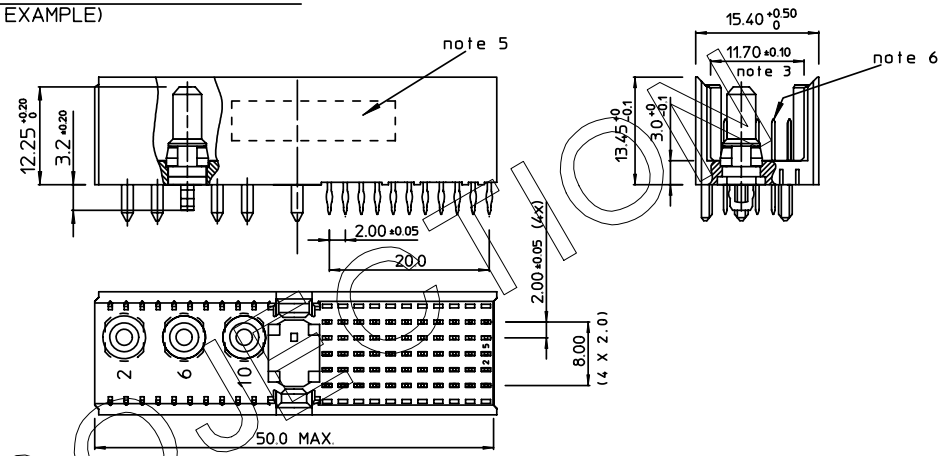

CONTACT OVERVIEW

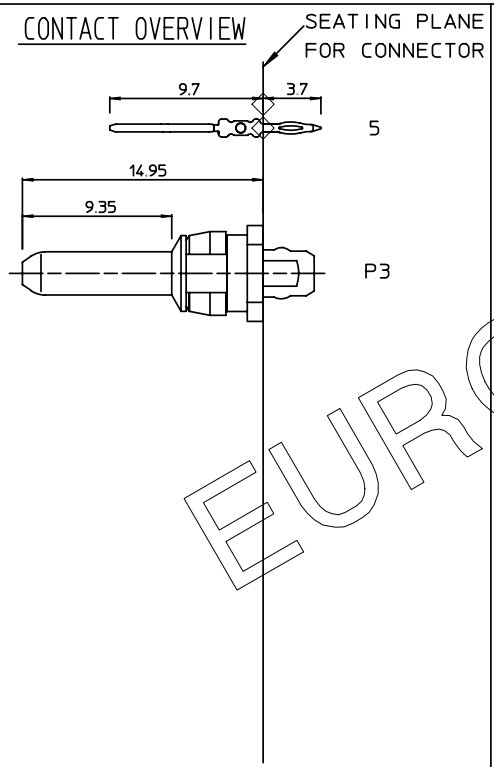

LAY-OUT P.C.B.-HOLE

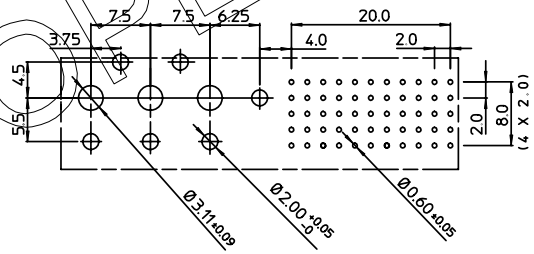

PLATING
-POWER CONTACTS ->'--LC--' : 0.8 µm Au over 2.0 µm Ni(OPTIONAL)
All Others : 1.5 µm Au over 2.0 µm Ni

LEAD FREE INDICATOR : LF=LEAD FREE
(DIGIT 17 & 18)

-SIGN.CONT.-> HM2A31PG60J0------

PLATING CODE (DIGIT 13 AND 14)
(REF DRW No BS,C ,2018444,003)

NOTES

1. THIS PRODUCT IS CSA APPROVED.
2. THIS PRODUCT IS UL RECOGNIZED.
3. MEASURED AT THE BOTTOM.
4. MATERIAL CONTACT: PHOSPHORBRONZE
   HOUSING: CREAM WHITE GLASFILLED POLYESTER UL-94V0
5. CONNECTOR PRINTED WITH P/N AND DATE CODE.
6. FOR ACTUAL CONTACT LOADINGS, SEE LOADING PATTERN MATING SIDE.
7. THE PRODUCT (LF)MEETS EUROPEAN UNION DIRECTIVES AND OTHER COUNTRY REGULATIONS AS DESCRIBED IN GS-22-008
8 PCB HOLE DEFINITION
8.1 FOR PTH DETAILS OF SIGNAL CONTACTS REFER BS,A ,201572,001
8.2 FOR PTH DETAILS OF POWER CONTACTS

Ø drilled hole	Cu plating	SnPb/Sn plating	Ø finished hole
3.19 - 3.25	25 µm min.	5 µm min.	3.02 - 3.20

1DEC ±0,2
2DEC ±0,1
ANGLES ±1°

WE RESERVE THE RIGHT TO CHANGE DIMENSIONS OR REQUIREMENTS WITHOUT PRIOR NOTICE.

ALL DIMENSIONS IN MM

APPR.	DATE	SIGN.
DRAFT	2000-05-19	M.Fret
CHECKED		
PROD. MGR.		
PR.ENG.MGR.		
PR.MGT.MGR.		

REFERENCES

MPACS 5R STR HDR CONN TYPE M

CAT. No. HM2A31PG60J0------

FCI www.fciconnect.com

SCALE

BS,C ,202498,010 — DRAWING No.

CUSTOMER DRAWING

D — REVISION

THIS IS OUR EXCLUSIVE PROPERTY. IT IS NOT TO BE COPIED, REPRINTED OR DISCLOSED TO A THIRD PARTY, NOR USED FOR MANUFACTURING WITHOUT OUR WRITTEN CONSENT, AND HAS TO BE RETURNED TO US IN CASE OF NO USAGE

DIT IS ONZE EIGENDOM EN MAG NOCH NAGEMAAKT, HERDRUKT, OVERGEMAAKT AAN DERDEN, NOCH VOOR FABRIKATIE GEBRUIKT WORDEN, ZONDER ONZE SCHRIFTELIJKE TOELATING. BIJ NIET GEBRUIK IS TERUGZENDING VERPLICHT.

EUROPEAN PROJECTION