THIS COPY IS PROVIDED ON A RESTRICTED BASIS AND IS NOT TO BE USED IN ANY WAY DETRIMENTAL TO THE INTERESTS OF PANDUIT CORP.

PANDUIT PART NO.	WEIGHT
ICFX10	7.7 LB/100 PCS (3501 g/100 PCS)

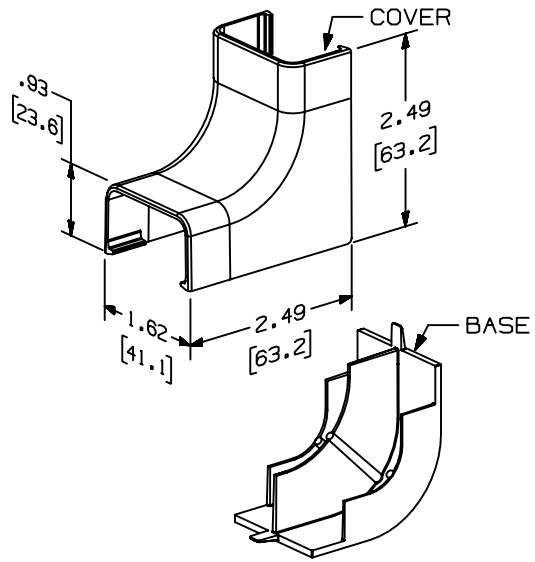

NOTES:
1. SEE CURRENT CATALOG FOR ADDITIONAL PART NUMBER SUFFIXES TO INDICATE COLOR AND OR PACKAGE QUANTITY.
2. (A) THIS PRODUCT IS INTENDED TO BE USED WITH PANDUIT TYPE LD10, LDP10 AND LDP210 RACEWAY.
3. NOMINAL WALL THICKNESSES:
   BASE = .090 [2.3]
   COVER = .070 [1.8]
4. THIS PRODUCT IS FEATURED WITH THE TIA/EIA COMPLIANT BEND RADIUS.
5. DIMENSIONS IN PARENTHESIS ARE IN METRIC.

REV	DATE	BY	CHK	DESCRIPTION	ECN	CHK	CUST	SUP
1	03-12-04	JHEP	RGRO	A. REMOVED CD10 FROM NOTE 2	35013-06	RGRO	RGRO	
R	02-13-95	DW	CEF	RELEASED TO PRODUCTION	35013-06	CEF	CEF	

CAD FILENAME/LAYERS: D35013BF_LD_ICFX10_01.PRT

PANDUIT CORP. TINLEY PARK, ILLINOIS

INSIDE CORNER FITTING BASE AND COVER (ICFX10)
CUSTOMER DRAWING

UNLESS OTHERWISE SPECIFIED, DIMENSIONAL TOLERANCES ARE:
(.X) ± (.XXX) ±.015 [.4]
(.XX) ±.03 [.8] ANGLES ±

UNLESS OTHERWISE SPECIFIED, ALL DIMENSIONS ARE GIVEN IN INCHES, THIRD ANGLE PROJECTION.

DRAWN BY: DW
DATE: 02-13-95
CHECKED BY: CEF
MAT'L: PVC
SCALE: NONE
DRAWING NO.: 35013-06
DWG SIZE: A