APPROVED: _____

DATE: _____ TITLE: _____

| Rev | AWO # | Description | Date | Appr |
|---|---|---|---|---|
| - | | RELEASED | 10/23/07 | |
| A | | REDRAWN | 5/11/12 | |

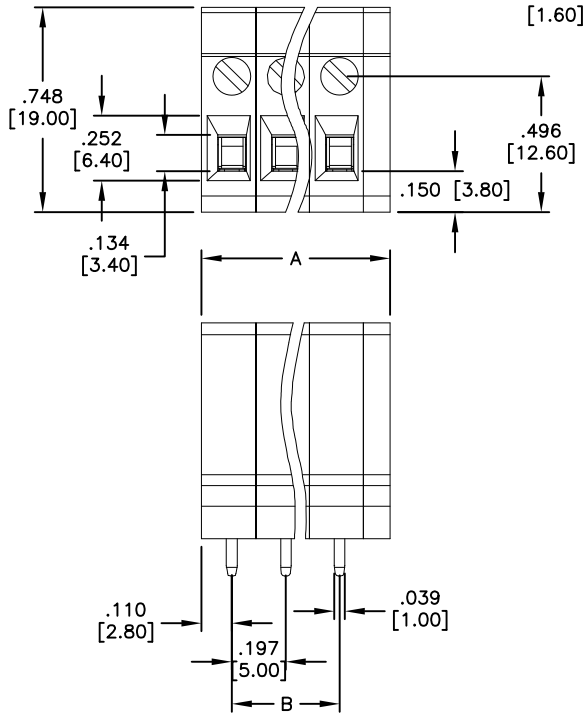


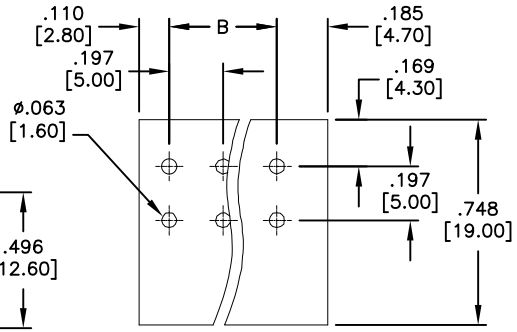


RECOMMENDED PCB LAYOUT

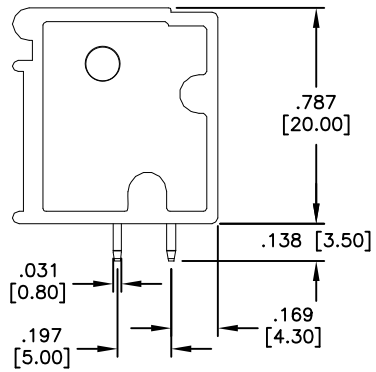


SPECIFICATIONS:
Material:
Insulator: NY66, rated UL 94V–0
Insulator color: Green
Contact: Brass, Tin plated
Screw: Steel, M2.5/Zn plated
Electrical:
Operation voltage: 300 VAC
Current rating: 20 Amps
Withstanding Voltage: 1.6KV
Mechanical:
Solid wire(AWG): 12–22
Stranded wire(AWG): 12–22
Torque(Lb–In): 2.4
Wire strip length(mm): 10–11
Temperature Rating:
Operating temperature: –40°C to +115°C
Environmental:
Lead free, RoHS compliant.

RoHS COMPLIANT

| | Tolerance |
|---|---|
| 2–6P | ±.008 [0.20] |
| 7–12P | ±.010 [0.25] |
| 13–18P | ±.014 [0.35] |
| 19–24P | ±.016 [0.40] |

Positions: 02 thru 24
A= .197 [5.00] x No. of Positions +.098 [2.50]
B= .197 [5.00] x No. of Spaces

UNLESS OTHERWISE SPECIFIED
ALL DIMENSIONS ARE INCHES [MM]
TOLERANCES: EXCEPT AS NOTED

| INCHES | | HOLES | |
|---|---|---|---|
| .X | ± .10 | Ø.X | ±.10 |
| .XX | ± .020 | Ø.XX | ±.015 |
| .XXX | ± .015 | Ø.XXX | ±.010 |

| APPROVALS | | DATE |
|---|---|---|
| DRAWN | SS | 10/23/07 |
| CHECKED | | |
| APPROVED | | |

**ADAM TECH**


909 Rahway Avenue, Union, NJ 07083
Phone: 908–687–5000 Fax: 908–687–5710


TITLE
EURO BLOCK, 5.0mm, RIGHT ANGLE
2 THRU 24 POLES

| SIZE | PART NO. | REV. |
|---|---|---|
| X | EB7-XX-C | A |

REF: S00007T | SCALE: NTS | SHEET 1 OF 1