PART NAME	NEMA 6P / IP68 ENCLOSURE	PART No.	PN-1327-A, PN-1327-AC	REVISION DATE	8/3/2020

NOTES:

1. MATERIAL AND FLAMMABILITY.
   POLYCARBONATE (LIGHT GRAY AND CLEAR) - UL94-HB
   BODY, COVER AND CLEAR COVER (C)
   FLAMMABILITY RATING (UL FILE #E41613)
   SERVICE TEMPUTER RANGE: -40˚C TO +120˚C

2. UL 508A (E352997) UL CERT OF COMPLIANCE.: BOXES UL LISTED NEMA TYPE 6P STANDARD. DESIGNED MEETS IP68 OF IEC529 REQUIREMENTS. PC VERSION UV RESISTANT FOR OUT DOOR USE.

3. GASKET (NOT INSTALLED) MOLDED SILICONE WHITE

4. DIMENSIONS ARE INCH

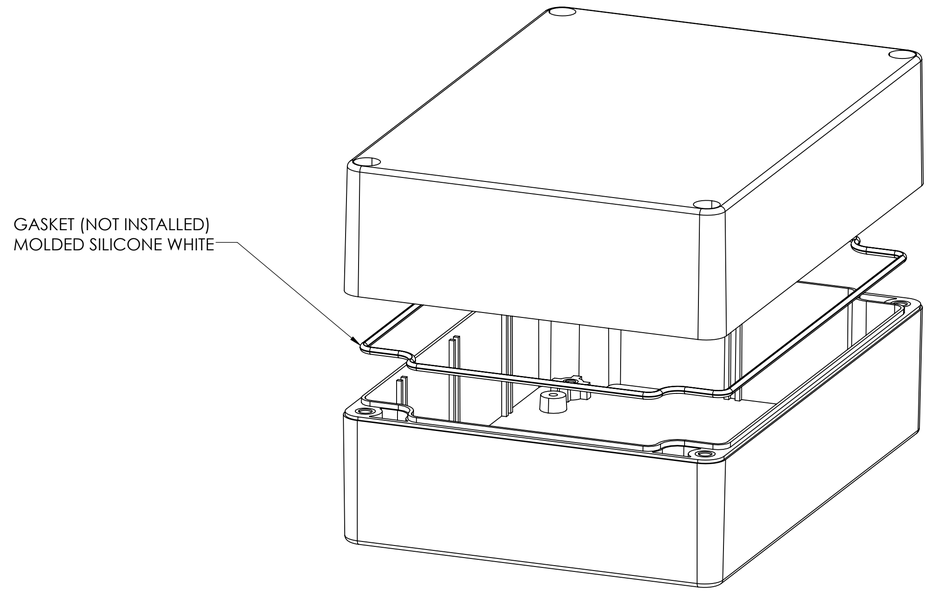

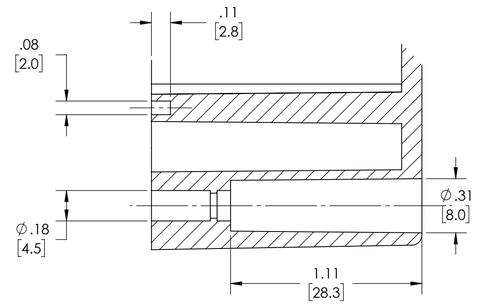

DETAIL C
SCALE 2 : 1

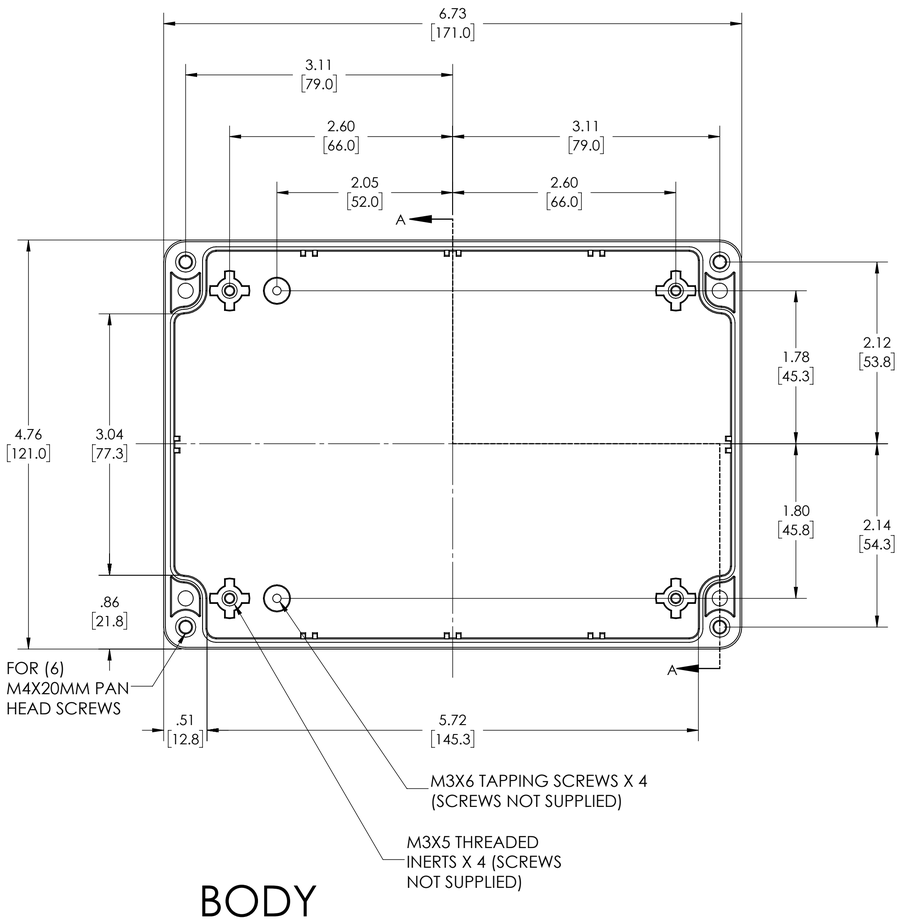

BODY

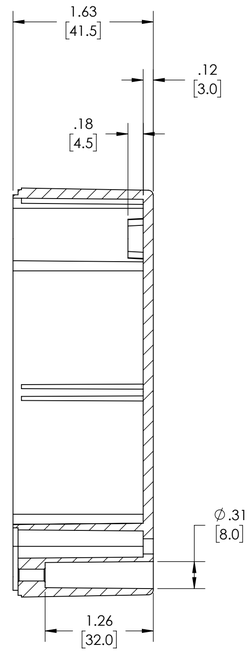

SECTION A-A

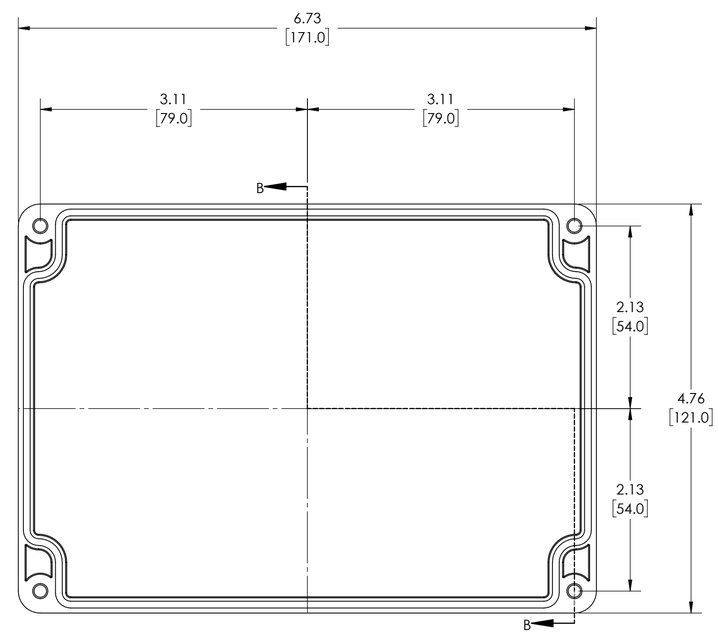

COVER

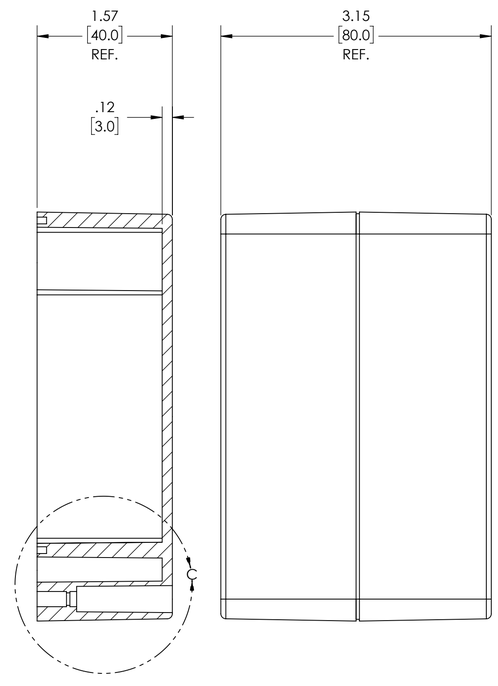

SECTION B-B

DRAWING FOR REFERENCE
WE RESERVE THE RIGHT TO MAKE CHANGES TO OUR STANDARD PRODUCTS. PLEASE CONSULT WITH BUD INDUSTRIES PRIOR TO USING THIS DRAWING FOR DESIGN PURPOSE.