Crystal Units
Surface Mount Type CX5032SA

KYOCERA

5.0×3.2mm for Automotive

Pb Free RoHS Compliant

Features

- Crystal unit for automotive electronics
- Improved solderability
- Using ceramic package resulting in high reliability
- Small and low profile
- Improved rust prevention performance
- Reflow compatible
- AEC-Q200 certified

Applications

- ECU • TPMS
- High-Speed Automotive Network (Flex Ray™ etc.)

How to Order

CX5032SA 08000 □□ □ □ □ □□
① ② ③ ④ ⑤ ⑥ ⑦

① Series ② Frequency

③ Load Capacitance

D0	8 pF	—
F0	10 pF	—
H0	12 pF	Std.

④ Frequency Stability

P	±50×10⁻⁶	Std.
Q	±100×10⁻⁶	—

⑤Operating Temp. Range ⑥Frequency Temp. Stability

SV	–40 to +125°C	±150×10⁻⁶	—
TW	–40 to +150°C	±200×10⁻⁶	Std.

⑦ Individual Specification

Specifications

Item	Symbol	Specification	Units	Remarks
Frequency Range	f_{nom}	8000 to 40000	kHz	
Overtone Order	OT	Fundamental	—	
Load Capacitance	CL	12	pF	
Frequency Stability	f_{tol}	±50	$\times 10^{-6}$	25°C±3°C
Motional Series Resistance	R1	Table 1	ohm	
Drive Level	DL	Table 2	μW	
Operating Temp. Range	T_{use}	–40 to +150	°C	
Storage Temp. Range	T_{stg}	–40 to +150	°C	
Frequency Temp. Characteristics	f_{tem}	±200	$\times 10^{-6}$	Freq. deviation from the value at 25°C

∗ Please contact us for other specifications.

Typical Frequencies and Part Numbers

Frequency (kHz)	Part Number
8000.000	CX5032SA08000H0PTWZ1
9843.750	CX5032SA09843H0PTWZ1
10000.000	CX5032SA10000H0PTWZ1
12000.000	CX5032SA12000H0PTWZ1
13560.000	CX5032SA13560H0PTWZ1
15000.000	CX5032SA15000H0PTWZ1
16000.000	CX5032SA16000H0PTWZ1
18000.000	CX5032SA18000H0PTWZ1
20000.000	CX5032SA20000H0PTWZ1
24000.000	CX5032SA24000H0PTWZ1
25000.000	CX5032SA25000H0PTWZ1

Table1 Motional Series Resistance

Frequency Range	Motional Series Resistance
8000 to 8999kHz	200Ω max.
9000 to 11999kHz	150Ω max.
12000 to 19999kHz	100Ω max.
20000 to 40000kHz	50Ω max.

Table2 Level of Drive

Frequency Range	Level of Drive
8000 to 40000kHz	10μW (100μW max.)

Dimensions

(Unit: mm)

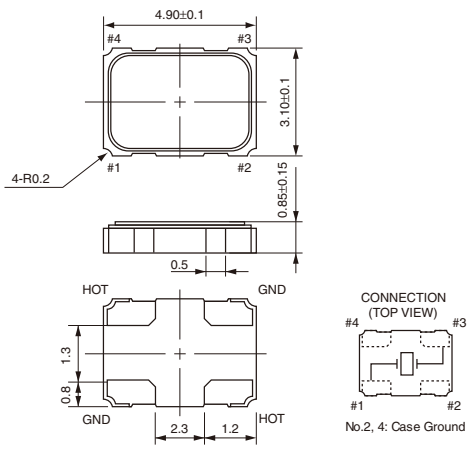

Recommended Land Pattern
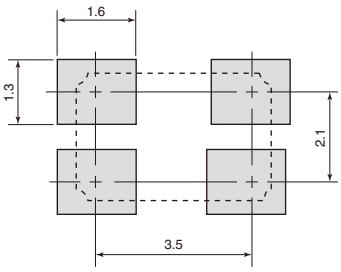
(Unit: mm)