Americas

Atlanta, GA - 678-957-9614
Austin, TX - 512-257-3370
Boston, MA - 774-760-0087
Chicago, IL - 630-285-0071
Dallas, TX - 972-818-7423
Detroit, MI - 248-848-4000
Houston, TX - 281-894-5983
Indianapolis, IN - 317-773-8323
Los Angeles, CA - 949-462-9523
New York, NY - 631-435-6000
Phoenix, AZ - 480-792-7200
Raleigh, NC - 919-844-7510
San Jose, CA - 408-735-9110
Canada - Toronto - 905-695-1980

Europe

Austria - Wels - 43-7242-2244-39
Denmark - Copenhagen - 45-4450-2828
Finland - Espoo - 358-9-4520-820
France - Paris - 33-1-69-53-63-20
France - Saint Cloud - 33-1-30-60-70-00
Germany - Garching - 49-8931-9700
Germany - Haan - 49-2129-3766400
Germany - Heilbronn - 49-7131-67-3636
Germany - Karlsruhe- 49-721-625370
Germany - Munich - 49-89-627-144-0
Germany - Rosenheim - 49-8031-354-560
Israel - Ra'anana - 972-9-744-7705
Italy - Milan - 39-0331-742611
Italy - Padova - 39-049-7625286
Netherlands - Drunen - 31-416-690399
Norway - Trondheim - 47-7289-7561
Poland - Warsaw - 48-22-3325737
Romania - Bucharest - 40-21-407-87-50
Spain - Madrid - 34-91-708-08-90
Sweden - Gothenberg - 46-31-704-60-40
Sweden - Stockholm - 46-8-5090-4654
UK - Wokingham - 44-118-921-5800

Asia/Pacific

Hong Kong - 852-2943-5100
Australia - Sydney - 61-2-9868-6733
China - Beijing - 86-10-8569-7000
China - Chengdu - 86-28-8665-5511
China - Chongqing - 86-23-8980-9588
China - Dongguan - 86-769-8702-9880
China - Guangzhou - 86-20-8755-8029
China - Hangzhou - 86-571-8792-8115
China - Hong Kong SAR - 852-2943-5100
China - Nanjing- 86-25-8473-2460
China - Qingdao - 86-532-8502-7355
China - Shanghai - 86-21-3326-8000
China - Shenyang - 86-24-2334-2829
China - Shenzhen - 86-755-8864-2200
China - Wuhan - 86-27-5980-5300
China - Xiamen - 86-592-2388138
China - Xian - 86-29-8833-7252
China - Zhuhai - 86-756-3210040
India - Bangalore - 91-80-3090-4444
India - New Delhi - 91-11-4160-8631
India - Pune - 91-20-3019-1500
Japan - Osaka - 81-6-6152-7160
Japan - Tokyo - 81-3-6880-3770
Korea - Daegu - 82-53-744-4301
Korea - Seoul - 82-2-554-7200
Malaysia - Kuala Lumpur - 60-3-6201-9857
Malaysia - Penang - 60-4-227-8870
Philippines - Manila - 63-2-634-9065
Singapore - 65-6334-8870
Taiwan - Hsin Chu - 886-3-5778-366
Taiwan - Kaohsiung - 886-7-213-7830
Taiwan - Taipei - 886-2-2508-8600
Thailand - Bangkok - 66-2-694-1351

11/07/16

Microchip Technology Inc. • 2355 West Chandler Blvd. • Chandler, AZ 85224-6199

www.microchip.com

The Microchip name and logo, the Microchip logo, and MPLAB are registered trademarks of Microchip Technology Incorporated in the U.S.A. and other countries. PICkit is a trademark of Microchip Technology Incorporated in the U.S.A. and other countries. All other trademarks mentioned herein are property of their respective companies.
© 2016, Microchip Technology Incorporated, Printed in the U.S.A. All Rights Reserved. 12/16

DS50002555A

PIC32MM Curiosity Development Board

Quick Start Guide

Overview

The PIC32MM Curiosity Development Board is a demonstration, development and experimentation platform based on the PIC32MM0064GPL036 low-power, low-cost microcontroller. The board has a built-in programmer/debugger and provides all of the hardware necessary to get started developing a complete embedded application. Some key features of the board include:

- PIC32MM0064GPL036 general purpose, 32-bit microcontroller
- PICkit™ On-Board (PKOB) circuit implements basic programming/debugging ability
- $\overline{\text{MCLR}}$ Reset button + two general purpose push buttons
- Red/Green/Blue (RGB) LED + two general purpose indicator LEDs
- 10k potentiometer
- 32.768 kHz crystal
- Female headers for access to microcontroller I/O pins
- Small prototyping area + Bluetooth® LE radio footprint
- mikroBUS™ interface for hardware expansion

Board Power-up

The board is intended to be powered through the micro-B USB connector (USB1). A MIC5528 linear regulator (U5) generates the +3.3V rail used by the PIC32MM0064GPL036 microcontroller.

Getting Started

Microchip Technology provides several example projects that can be used to get started with the PIC32MM Curiosity Development Board. The source code, the MPLAB® X IDE, the XC32 C compiler and the MPLAB Code Configurator (MCC) can be obtained from:

http://www.microchip.com/curiosity
http://www.microchip.com/mplab
http://www.microchip.com/xc32
http://www.microchip.com/mcc

The preprogrammed "out-of-box" demo project for the PIC32MM Curiosity Development Board implements an RGB color mixing application. In the demo, the potentiometer can be used to adjust each color channel intensity, independently, while the push buttons are used to select the channel to be adjusted.

In order to use the PKOB programmer/debugger within the MPLAB X IDE (v3.50 or later recommended), select:

```
Project Properties/Categories: Conf/Hardware Tool/Microchip
Starter Kits/Starter Kits (PKOB)/"PIC32MM Curiosi..."
```

Schematics

The schematics for the PIC32MM Curiosity Development Board are shown in Figure 1 and Figure 2.

FIGURE 1: PIC32MM CURIOSITY DEVELOPMENT BOARD SCHEMATICS REV. 1.0 (PAGE 1 OF 2)

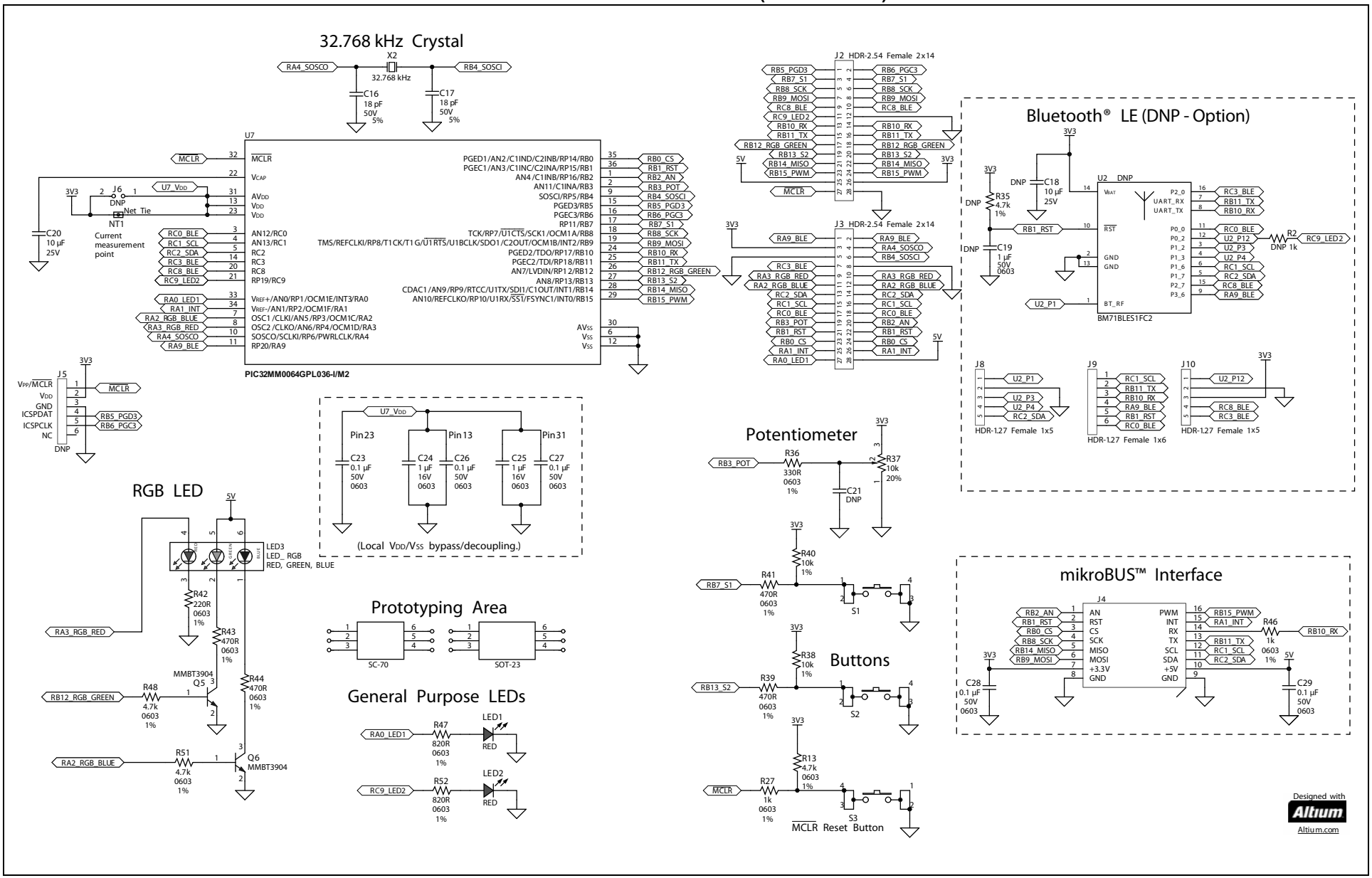
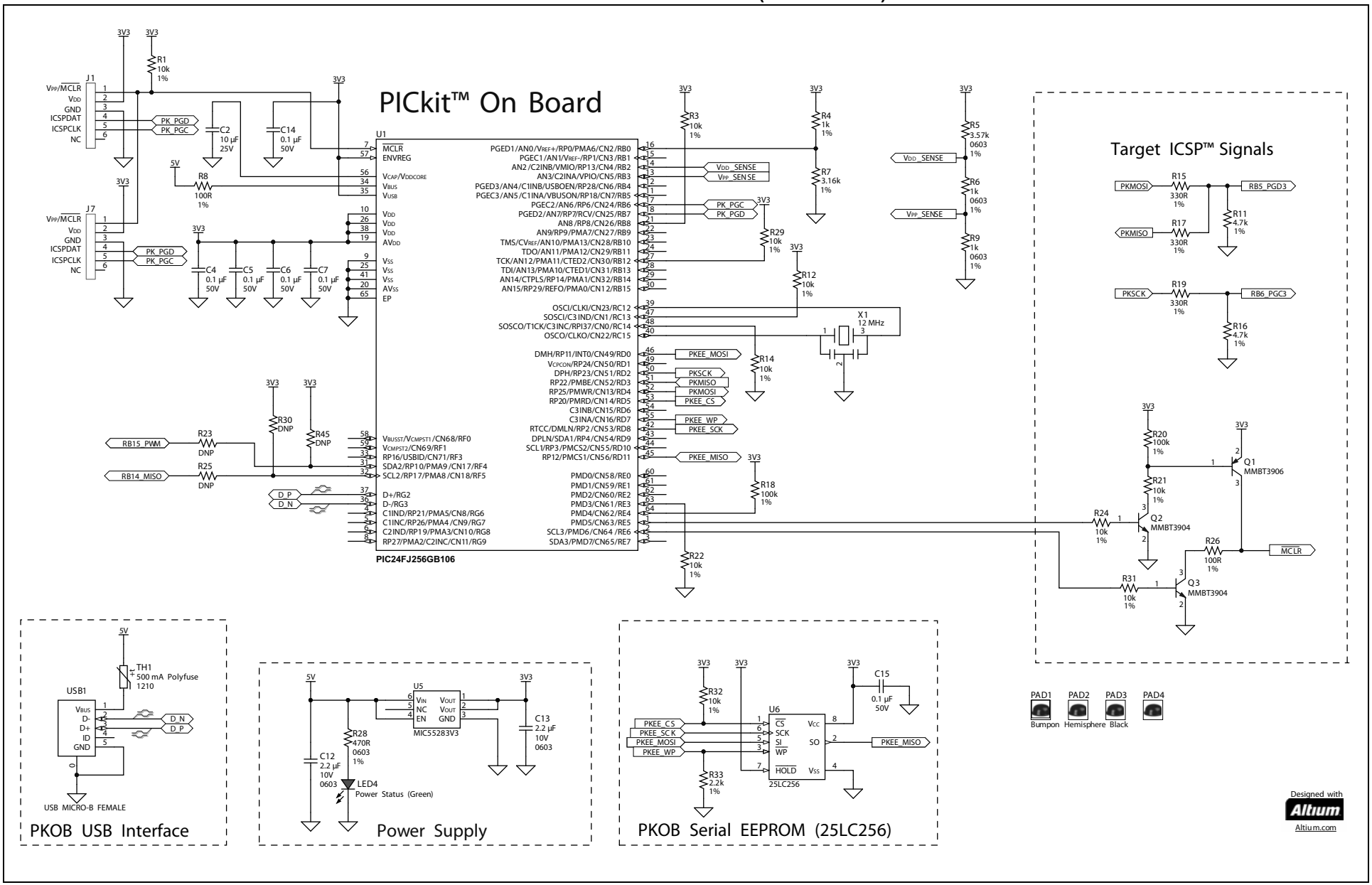
FIGURE 2: PIC32MM CURIOSITY DEVELOPMENT BOARD SCHEMATICS REV. 1.0 (PAGE 2 OF 2)