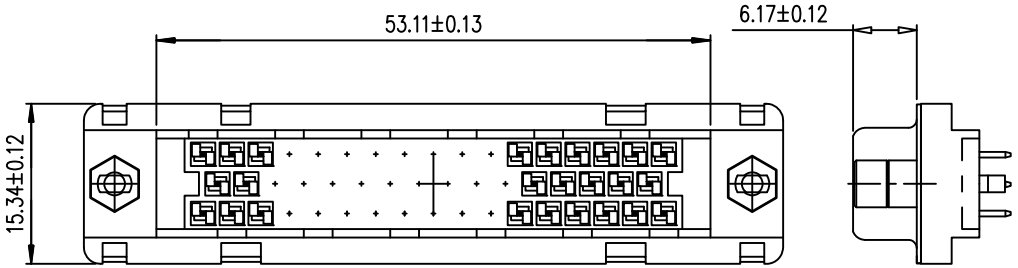

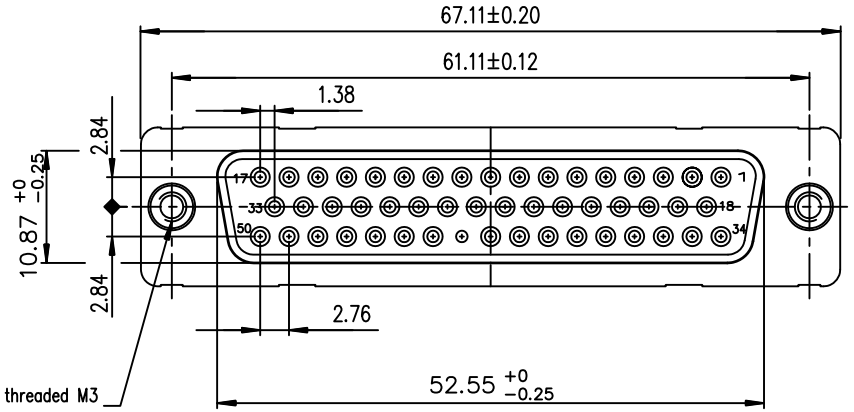

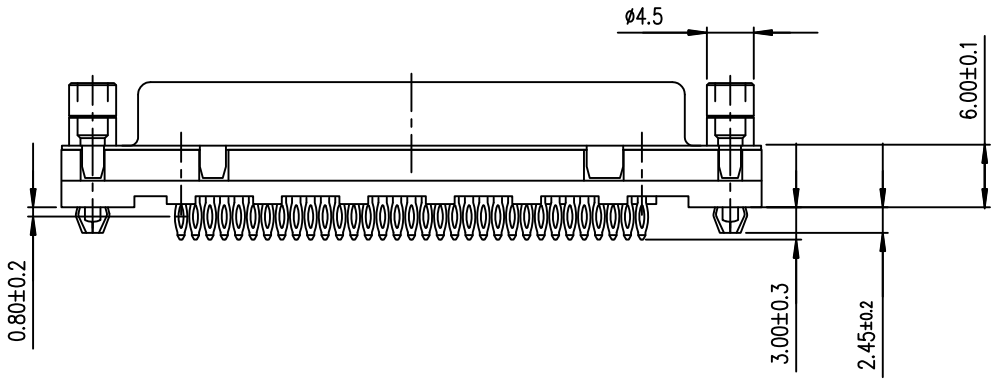

PC board drilling dimensions
(after plating – thickness: 1.60 to 3.20 mm)

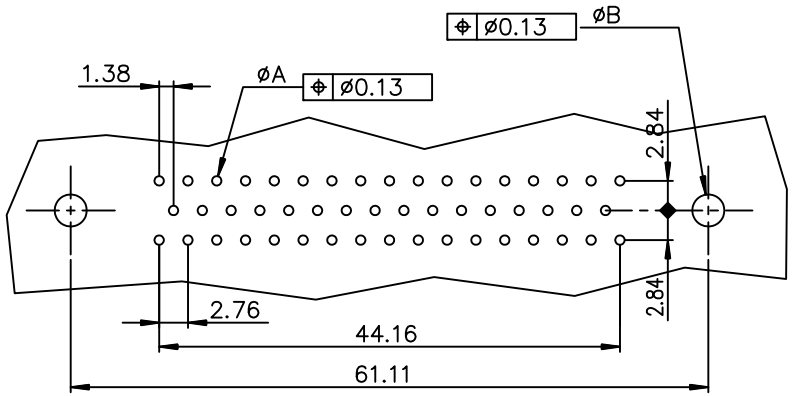

ROHS PART NUMBER

PART NUMBER	
200 Mating	D50S91C4GI00LF
500 Mating	D50S91C6GI00LF

GENERAL CHARACTERISTICS AND ROHS INFORMATIONS:
SEE DRAWING C01-8646-0001

ltr	ecn no	dr	date
B	LS05-0056	MPE	2005-07-04
C	LS06-0097	LGO	2006-07-28
D	LS06-0140	LGO	2006-11-21
E	I11-0062	RPK	2011-04-05
F	ELX-I-24020	AAB	2016-06-06

dr	PESSON	1996-09-17
engr	MITHUN PAUL	2016-06-06
chr	ATHUL A.B	2016-06-06
appd	BIJU K PAUL	2016-06-06

mat'l. code
surface ISO 1302
tolerance ISO 406 ISO 1101
tolerances unless otherwise specified
angles 0°±2°
linear .0±0.1 .00±0.1 .000±0.1
projection
mm
scale 2:1
sheet index
revision sheet F 1

product family: D-SUB
title: FEMALE CONNECTOR DELTA D
STRAIGHT PRESS FIT-FEMALE M3
dwg no: C01-8646-0499
sheet 1 of 1
size A3
type: Product Customer Drawing

Amphenol FCi

© 2016 AFCI

form: A3-2016-02-24