THIS DRAWING IS UNPUBLISHED. RELEASED FOR PUBLICATION -.- .
© COPYRIGHT - BY TYCO ELECTRONICS CORPORATION. ALL RIGHTS RESERVED.

LOC	DIST
AA	00

REVISIONS

P	LTR	DESCRIPTION	DATE	DWN	APVD
	B	ECO-07-029491	28FEB2007	LAM	AWF

1. MATERIAL:
   HOUSING: GLASS FILLED POLYESTER; COLOR: BLACK.
   CONTACT: PHOS BRONZE
2. FINISH:
   0.00076[.000030] MIN GOLD PLATE IN CONTACT AREA,
   0.00254[.000100] MIN MATTE TIN ON SOLDER POSTS, ALL
   OVER 0.00127[.000050] MIN NICKEL
3. AMP LOGO, TE PART NUMBER, DATE CODE AND CSA LOGO INK STAMPED WHITE (HOT STAMPED OR LAZER PRINTED) IN THE APPROXIMATE AREA SHOWN, EITHER SIDE PERMISSABLE, WHEN HOUSING SIZE PERMITS
4. RECOMMENDED PCB FINISHED HOLE DIAMETER = 1.02±0.08 [.040±.003]

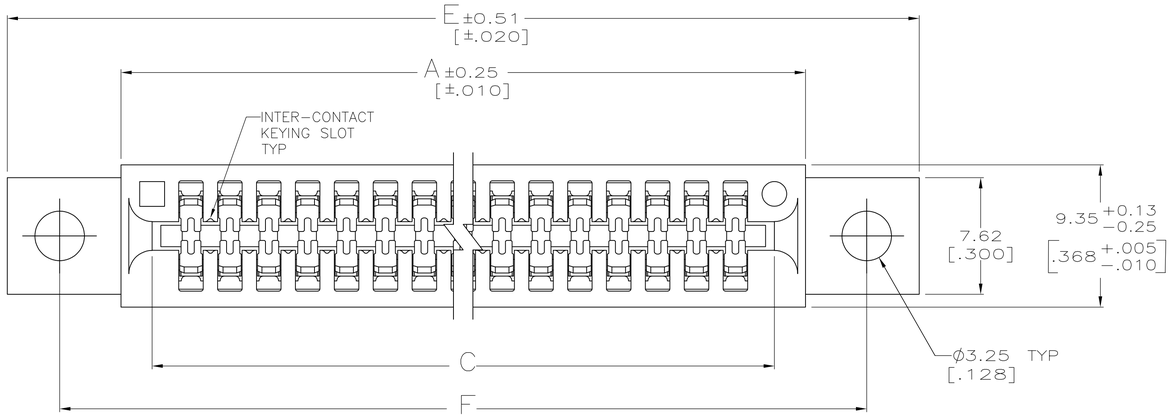

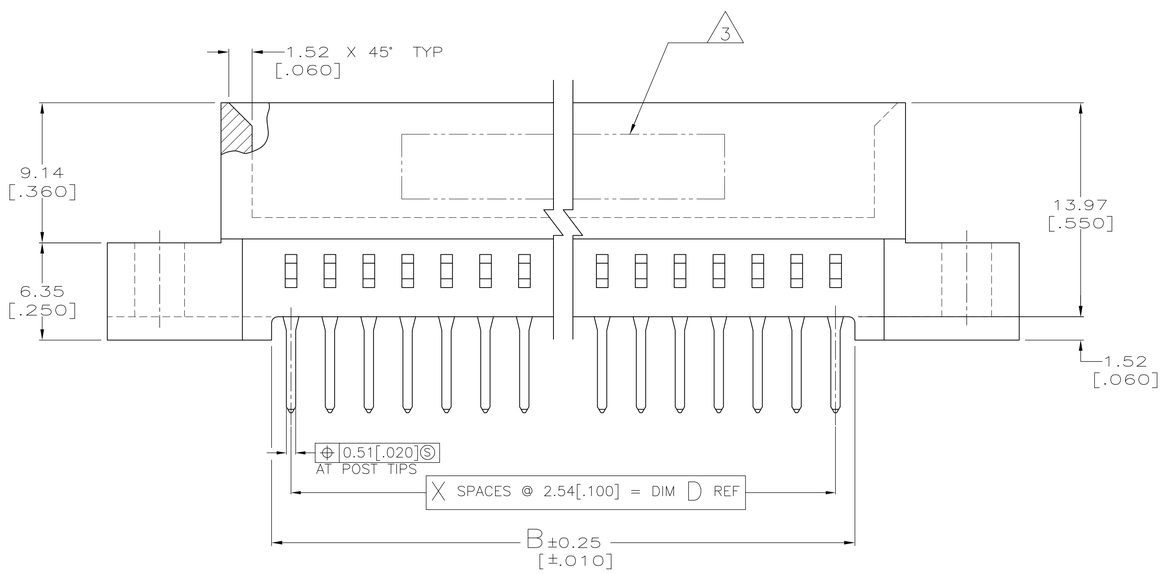

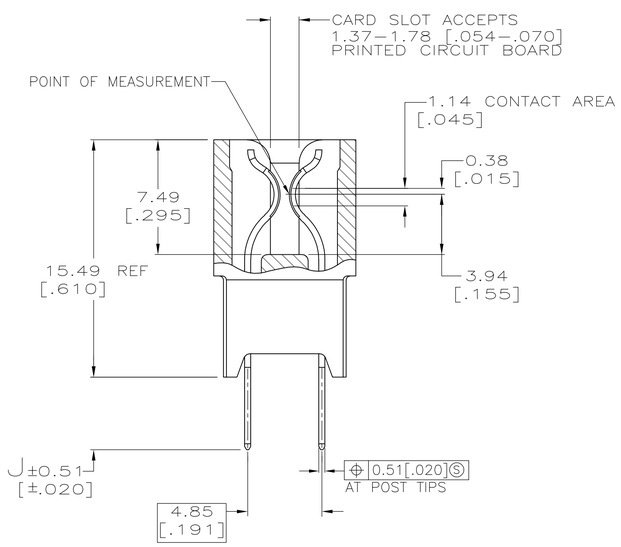

OBSOLETE	4-5530841-3
OBSOLETE	2-5530841-5
OBSOLETE	5530841-3

PART NUMBER

J	F	E	D	C	B	A	X	NO OF POSN	PART NUMBER
4.75 [.187]	90.80 [3.575]	97.41 [3.835]	73.66 [2.900]	78.74 [3.100]	76.20 [3.000]	82.80 [3.260]	29	30	1-5530841-8
3.18 [.125]	141.60 [5.575]	148.21 [5.835]	124.46 [4.900]	129.54 [5.100]	127.00 [5.000]	133.60 [5.260]	49	50	1-5530841-1
3.18 [.125]	78.10 [3.075]	84.71 [3.335]	60.96 [2.400]	66.04 [2.600]	63.50 [2.500]	70.10 [2.760]	24	25	5530841-5
3.18 [.125]	52.70 [2.075]	59.31 [2.335]	35.56 [1.400]	40.64 [1.600]	38.10 [1.500]	44.70 [1.760]	14	15	5530841-2

THIS DRAWING IS A CONTROLLED DOCUMENT.

DIMENSIONS: mm

TOLERANCES UNLESS OTHERWISE SPECIFIED:
0 PLC ± –
1 PLC ± –
2 PLC ± 0.13 [.005]
3 PLC ± –
4 PLC ± –
ANGLES ± 2°

MATERIAL: SEE NOTE 1
FINISH: SEE NOTE 2

DWN AWF/L.A.MAYER 28FEB2007
CHK AL FRANTUM 28FEB2007
APVD S.FLICKINGER 28FEB2007
PRODUCT SPEC 108-9039
APPLICATION SPEC 114-13018
WEIGHT –

Tyco Electronics
Tyco Electronics Corporation
Harrisburg, Pa 17105-3608

NAME: CONNECTOR ASSEMBLY, STANDARD EDGE II, 2.54 [.100] CENTERLINE

SIZE A1 | CAGE CODE 00779 | DRAWING NO C-5530841 | RESTRICTED TO –

CUSTOMER DRAWING | SCALE 5:1 | SHEET 1 OF 1 | REV B