P.C.B. HOLE DIM. ACTION PIN				
DRILLED HOLE	:1,15	±0,025		mm
FIN. HOLE	:0,94	to	1,09	mm
AFTER REFLOW	:0,91	to	1,09	mm
Cu–thks	:0,025	to	0,075	mm
SnPb–thks	:0,004	to	0,010	mm

DO NOT SCALE
DIMENSIONS IN mm

METRIC

THIRD ANGLE PROJECTION

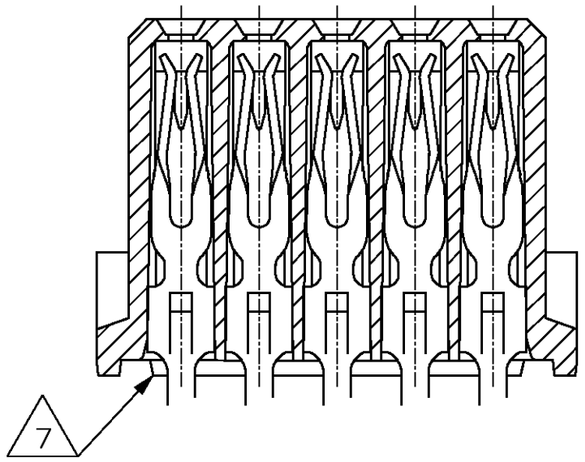

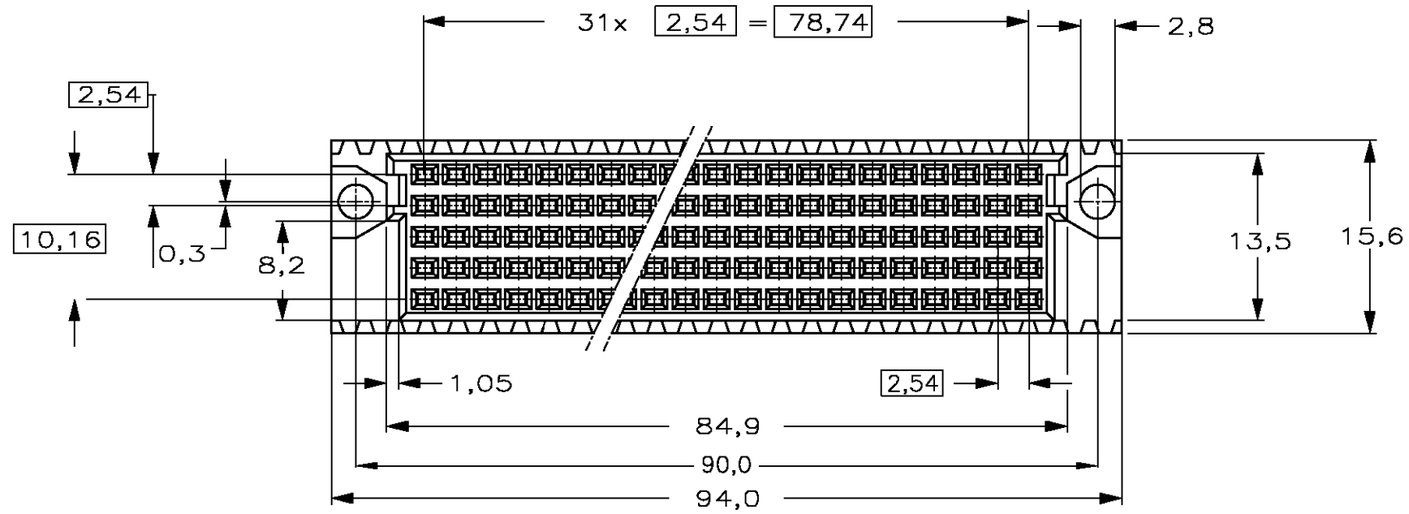

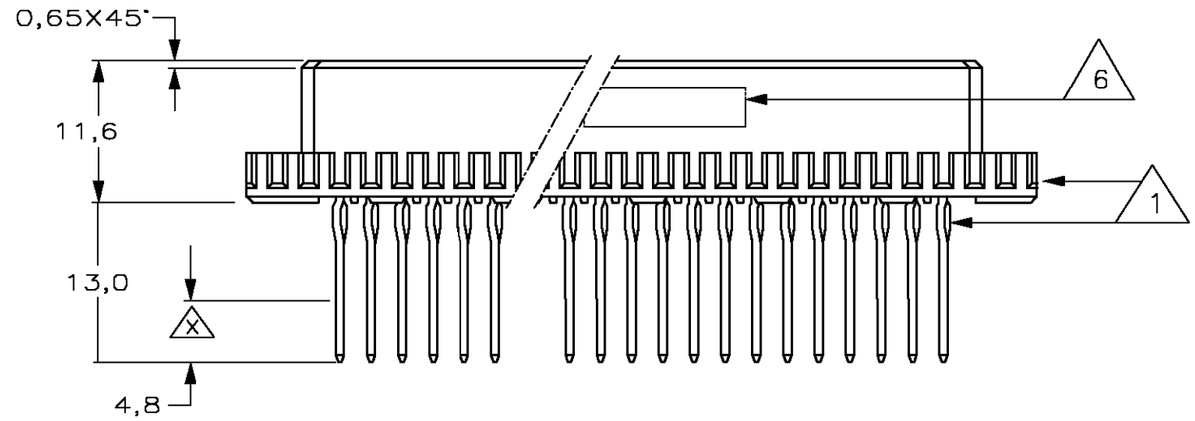

NOTES:

1. MATERIAL CONTACT: PHOSPHORBRONZE.
   MATERIAL HOUSING: GLASSFILLED THERM. POLYESTER.
2. AT CONTACTAREA GOLD OVER NICKEL, PERFORMANCE LEVEL I ACC. IEC 603–2
   REMAINDER TIN–LEAD.
3. AT CONTACTAREA GOLD OVER NICKEL, PERFORMANCE LEVEL II ACC. IEC 603–2
   REMAINDER TIN–LEAD.
4. AT CONTACTAREA AND AREA X GOLD OVER NICKEL, PERF. LEVEL I, ACC. IEC 603–2
   AT ACTION PIN AREA TIN–LEAD.
5. AT CONTACTAREA AND AREA X GOLD OVER NICKEL, PERF. LEVEL II, ACC. IEC 603–2
   AT ACTION PIN AREA TIN–LEAD.
6. CONNECTOR PRINTED WITH PARTNUMBER AND DATECODE ON OUTSIDE
   OF MATING AREA OF ROW e.
7. STAND–OFF RIBS OPTIONAL.

	FINISH	MATERIAL	PARTNUMBER
	5	1	1–106026–4
OBS	4	1	~~1–106026–1~~
OBS	3	1	~~106026–4~~
OBS	2	1	~~106026–1~~

ROW	Pos 32	31	30	29	28	27	26	25	24	23	22	21	20	19	18	17	16	15	14	13	12	11	10	9	8	7	6	5	4	3	2	1
a	X	X	X	X	X	X	X	X	X	X	X	X	X	X	X	X	X	X	X	X	X	X	X	X	X	X	X	X	X	X	X	X
b	X	X	X	X	X	X	X	X	X	X	X	X	X	X	X	X	X	X	X	X	X	X	X	X	X	X	X	X	X	X	X	X
c	X	X	X	X	X	X	X	X	X	X	X	X	X	X	X	X	X	X	X	X	X	X	X	X	X	X	X	X	X	X	X	X
d	X	X	X	X	X	X	X	X	X	X	X	X	X	X	X	X	X	X	X	X	X	X	X	X	X	X	X	X	X	X	X	X
e	X	X	X	X	X	X	X	X	X	X	X	X	X	X	X	X	X	X	X	X	X	X	X	X	X	X	X	X	X	X	X	X

AN ASTERISK „X" DENOTES A SIGNAL CONTACT.

LTR.	REVISION RECORD	DR.	CHK.	DATE
–	–	–	–	–
–	–	–	–	–
–	–	–	–	–
C	SR10–0383–01	BC	BC	03.09.01
B	EH–0306–99	T.K.	A.M.	11.02.99
A	EH–1250–96	RvH	–	25.05.98
0	H–10183	R.v.L	–	28.10.92

CUSTOMER DRAWING — FOR REFERENCE ONLY WILL NOT BE UPDATED

© COPYRIGHT 19 – BY Tyco Electronics EC N.V.
ALL INTERNATIONAL RIGHTS RESERVED.AMP PRODUCTS MAY BE COVERED BY U.S. AND FOREIGN AND/OR PATENTS PENDING.

THIS DRAWING IS UNPUBLISHED
~~RELEASED FOR PUBLICATION – ,19 –~~

AMP — Tyco Electronics EC N.V. Oostkamp – Belgium

NAME
5x32 POS. FEMALE W.W. CONN. ASS'Y
FOR 1,6 mm P.C. BOARD THK'S.

DR.: B.COLPAERT	CHK.: B.COLPAERT	APP.: COLPAERT	DWG.No.	REV.LTR.	SHEET	
DATE: –	DATE: –	DATE: –	C–106026	C	1 OF 1	A3

8 7 6 5 4 3 2 1