THIS DRAWING IS UNPUBLISHED. RELEASED FOR PUBLICATION ,19 .
(C) COPYRIGHT 19 BY AMP INCORPORATED. ALL RIGHTS RESERVED.

LOC	DIST
DF	CO

REVISIONS

P	LTR	DESCRIPTION	DATE	DWN	APVD
	K	REV PER OG3D-0276-01	7-02	CT	JM

1. THE TIP OF THE CONTACT POSTS WILL FALL WITHIN .025 DIAMETER TRUE POSITION OF EACH OTHER.
2. PARTS TO BE ASSEMBLED BY AMP INC.
3. AMP, PART NUMBER AND DATE CODE MARKED ON EITHER SIDE.

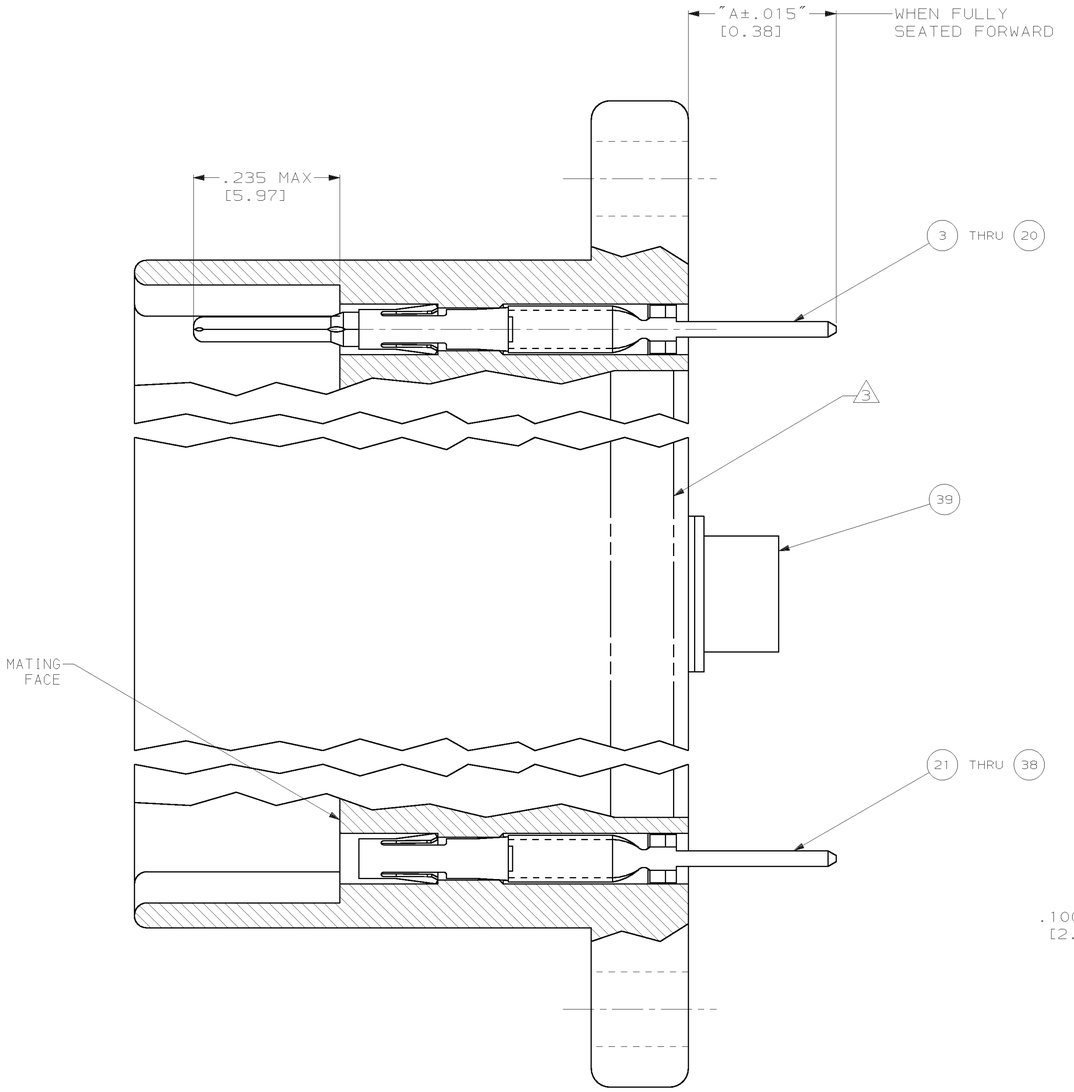

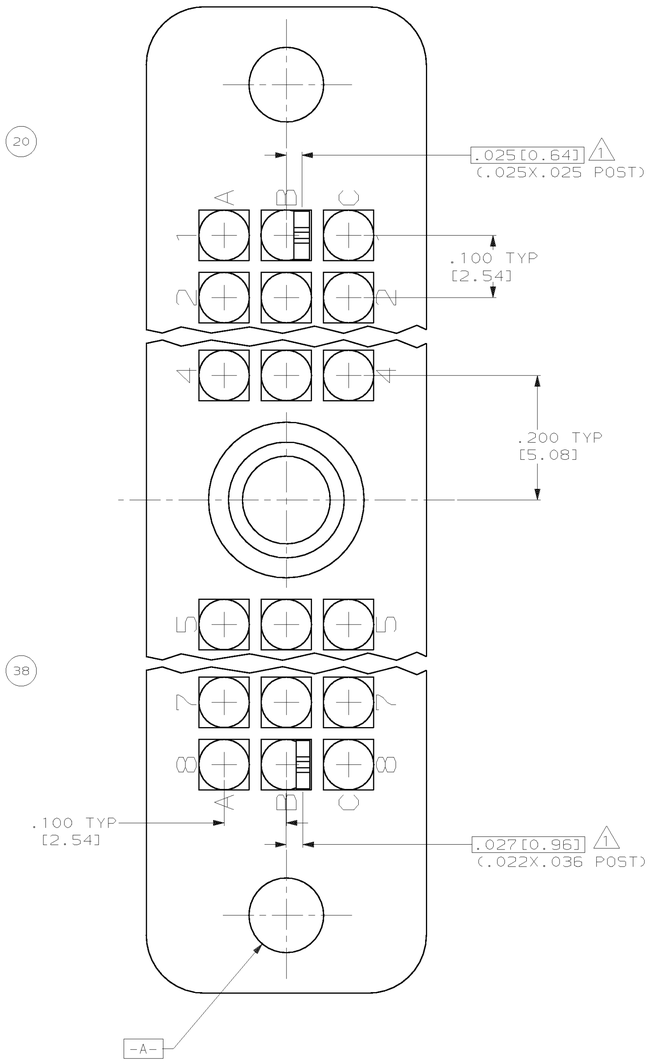

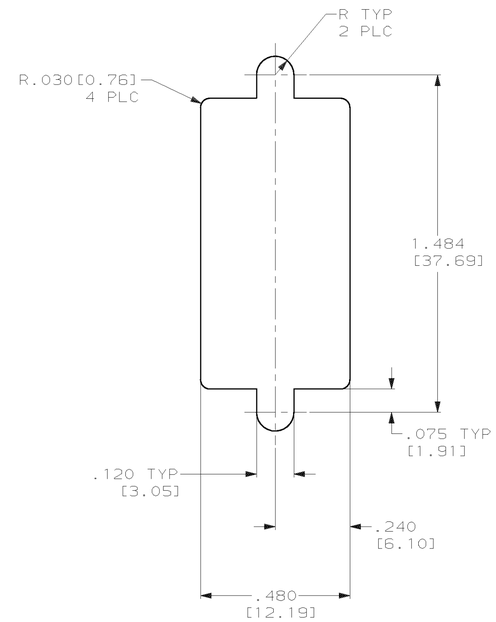

SUGGESTED PANEL CUTOUT
SCALE 4:1

"A"	NUMBER OF TERMINATIONS	TYPE OF POST
.520[13.21]	3	.022X.036 POST
.370[9.40]	2	
.220[5.59]	1	
.670[17.02]	3	.025X.025 POST
.456[11.58]	2	
.242[6.15]	1	

THIS DRAWING IS A CONTROLLED DOCUMENT FOR AMP INCORPORATED. IT IS SUBJECT TO CHANGE AND THE CONTROLLING ENGINEERING ORGANIZATION SHOULD BE CONTACTED FOR THE LATEST REVISION.

DIMENSIONS: IN[mm]

TOLERANCES UNLESS OTHERWISE SPECIFIED.
0 PLC ±-
1 PLC ±-
2 PLC ±-
3 PLC ±.005[0.13]
4 PLC ±-
ANGLES ±-

MATERIAL SEE TABLE
FINISH SEE TABLE

DWN T. THOMPSON 09-08-95
CHK D. MUMMEY 09-08-95
APVD D. MUMMEY 09-08-95
PRODUCT SPEC —
APPLICATION SPEC —
WEIGHT —

CUSTOMER DRAWING

AMP Incorporated
Harrisburg, PA 17105-3608

NAME 24 POSITION, HDR, RECEPTACLE W/ JACKSCREW

SIZE	CAGE CODE	DRAWING NO
A1	00779	C-204684

SCALE	SHEET	OF	REV
8:1	1	3	K

AMP 4805 REV 10/93

THIS DRAWING IS UNPUBLISHED. RELEASED FOR PUBLICATION ,19 .
© COPYRIGHT 19 BY AMP INCORPORATED. ALL RIGHTS RESERVED.

LOC	DIST
DF	CO

REVISIONS

P	LTR	DESCRIPTION	DATE	DWN	APVD
	-	SEE SHT 1	-	-	-

5-4	5-3	5-2	5-1	5-0	4-9	4-8	4-7	4-6	4-5	4-4	4-3	4-2	4-1	4-0	3-9	3-8	3-7	3-6	3-5	3-4	3-3	3-2	3-1	3-0	2-9	2-8	2-7	2-6	2-5	2-4	2-3	2-2	2-1	2-0	1-9	1-8	1-7	1-6	1-5	1-4	1-3	1-2	1-1	1-0	-9	-8	-7	-6	-5	-4	-3	-2	-1	DWG SIZE	PART NO	REMARKS	TERMINATIONS	DESCRIPTION	ITEM NO
1	1	1	1	1	1	1	1	1	1	1	1	1	1	1	1	1	1	1	1	1	1	1	1	1	1	1	1	1	1	1	1	1	1	1	1	1	1	1	1	1	1	1	1	1	1	1	1	1	1	1	1	1	1	A	204299-1	FEMALE	-	JACKSCREW ASSY KIT	39
-	-	-	-	-	-	-	-	-	-	-	-	-	-	-	-	-	-	-	-	-	-	-	-	-	-	-	-	-	-	-	-	-	-	-	-	-	-	-	-	-	-	-	-	-	-	-	-	-	-	-	-	-	-	C	1-205172-2	GOLD/NICKEL	3	SOCKET ASSY .025 X .025 POST	38
-	-	-	-	-	-	-	-	-	-	-	-	-	-	-	-	-	-	-	-	-	-	-	-	-	-	-	-	-	-	-	-	-	-	-	-	-	-	-	-	-	-	-	-	-	-	-	-	-	-	-	-	-	-	C	1-205172-1	GOLD/NICKEL	2	SOCKET ASSY .025 X .025 POST	37
-	-	-	-	-	-	-	-	-	-	-	-	-	-	-	-	-	-	-	-	-	-	-	-	-	-	-	-	-	-	-	-	-	-	-	-	-	-	-	-	-	-	-	-	-	-	-	-	-	-	-	-	-	-	C	1-205172-0	GOLD/NICKEL	1	SOCKET ASSY .025 X .025 POST	36
-	-	-	-	-	-	-	-	-	-	-	-	-	-	-	-	-	-	-	-	-	-	-	-	-	-	-	-	-	-	-	-	-	-	-	-	-	-	-	-	-	-	-	-	-	-	-	-	-	-	-	-	-	-	C	205172-9	SELECTIVE GOLD	3	SOCKET ASSY .025 X .025 POST	35
-	-	-	-	-	-	-	-	-	-	-	-	-	-	-	-	-	-	-	-	-	-	-	-	-	-	-	-	-	-	-	-	-	-	-	-	-	-	-	-	-	-	-	-	-	-	-	-	-	-	-	-	-	-	C	205172-8	SELECTIVE GOLD	2	SOCKET ASSY .025 X .025 POST	34
-	-	-	-	-	-	-	-	-	-	-	-	-	-	-	-	-	-	-	-	-	-	-	-	-	-	-	-	-	-	-	-	-	-	-	-	-	-	-	-	-	-	-	-	-	-	-	-	-	-	-	-	-	-	C	205172-7	SELECTIVE GOLD	1	SOCKET ASSY .025 X .025 POST	33
-	-	-	-	-	-	-	-	-	-	-	-	-	-	-	-	-	-	-	-	-	-	-	-	-	-	-	-	-	-	-	-	-	-	-	-	-	-	-	-	-	-	-	-	-	-	-	-	-	-	-	-	-	-	C	205172-3	TIN	3	SOCKET ASSY .025 X .025 POST	32
-	-	-	-	-	-	-	-	-	-	-	-	-	-	-	-	-	-	-	-	-	-	-	-	-	-	-	-	-	-	-	-	-	-	-	-	-	-	-	-	-	-	-	-	-	-	-	-	-	-	-	-	-	-	C	205172-2	TIN	2	SOCKET ASSY .025 X .025 POST	31
-	-	-	-	-	-	-	-	-	-	-	-	-	-	-	-	-	-	-	-	-	-	-	-	-	-	-	-	-	-	-	-	-	-	-	-	-	-	-	-	-	-	-	-	-	-	-	-	-	-	-	-	-	-	C	205172-1	TIN	1	SOCKET ASSY .025 X .025 POST	30
24	-	-	-	-	-	-	-	-	24	-	-	-	-	-	-	-	-	-	-	-	-	-	-	-	-	-	-	-	-	-	-	-	-	-	-	-	-	-	-	-	-	-	-	-	-	-	-	-	-	-	-	-	-	C	204292-9	SELECTIVE GOLD	3	SOCKET ASSY .022 X .036 POST	29
-	24	-	-	-	-	-	-	-	-	24	-	-	-	-	-	-	-	-	-	-	-	-	-	-	-	-	-	-	-	-	-	-	-	-	-	-	-	-	-	-	-	-	-	-	-	-	-	-	-	-	-	-	-	C	204292-8	SELECTIVE GOLD	2	SOCKET ASSY .022 X .036 POST	28
-	-	24	-	-	-	-	-	-	-	-	24	-	-	-	-	-	-	-	-	-	-	-	-	-	-	-	-	-	-	-	-	-	-	-	-	-	-	-	-	-	-	-	-	-	-	-	-	-	-	-	-	-	-	C	204292-7	SELECTIVE GOLD	1	SOCKET ASSY .022 X .036 POST	27
-	-	-	24	-	-	-	-	-	-	-	-	24	-	-	-	-	-	-	-	-	-	-	-	-	-	-	-	-	-	-	-	-	-	-	-	-	-	-	-	-	-	-	-	-	-	-	-	-	-	-	-	-	-	C	204292-6	NICKEL	3	SOCKET ASSY .022 X .036 POST	26
-	-	-	-	24	-	-	-	-	-	-	-	-	24	-	-	-	-	-	-	-	-	-	-	-	-	-	-	-	-	-	-	-	-	-	-	-	-	-	-	-	-	-	-	-	-	-	-	-	-	-	-	-	-	C	204292-5	NICKEL	2	SOCKET ASSY .022 X .036 POST	25
-	-	-	-	-	24	-	-	-	-	-	-	-	-	24	-	-	-	-	-	-	-	-	-	-	-	-	-	-	-	-	-	-	-	-	-	-	-	-	-	-	-	-	-	-	-	-	-	-	-	-	-	-	-	C	204292-4	NICKEL	1	SOCKET ASSY .022 X .036 POST	24
-	-	-	-	-	-	24	-	-	-	-	-	-	-	-	24	-	-	-	-	-	-	-	-	-	-	-	-	-	-	-	-	-	-	-	-	-	-	-	-	-	-	-	-	-	-	-	-	-	-	-	-	-	-	C	204292-3	GOLD/NICKEL	3	SOCKET ASSY .022 X .036 POST	23
-	-	-	-	-	-	-	24	-	-	-	-	-	-	-	-	24	-	-	-	-	-	-	-	-	-	-	-	-	-	-	-	-	-	-	-	-	-	-	-	-	-	-	-	-	-	-	-	-	-	-	-	-	-	C	204292-2	GOLD/NICKEL	2	SOCKET ASSY .022 X .036 POST	22
-	-	-	-	-	-	-	-	24	-	-	-	-	-	-	-	-	24	-	-	-	-	-	-	-	-	-	-	-	-	-	-	-	-	-	-	-	-	-	-	-	-	-	-	-	-	-	-	-	-	-	-	-	-	C	204292-1	GOLD/NICKEL	1	SOCKET ASSY .022 X .036 POST	21
-	-	-	-	-	-	-	-	-	-	-	-	-	-	-	-	-	-	-	-	-	-	-	-	-	-	-	-	-	-	-	-	-	-	-	-	-	-	24	-	-	-	-	-	-	-	-	24	-	-	-	-	-	-	C	204285-9	SELECTIVE GOLD	1	PIN ASSY .022 X .036 POST	20
-	-	-	-	-	-	-	-	-	-	-	-	-	-	-	-	-	-	-	-	-	-	-	-	-	-	-	-	-	-	-	-	-	-	-	-	-	24	-	-	-	-	-	-	-	-	24	-	-	-	-	-	-	-	C	204285-8	SELECTIVE GOLD	2	PIN ASSY .022 X .036 POST	19
-	-	-	-	-	-	-	-	-	-	-	-	-	-	-	-	-	-	-	-	-	-	-	-	-	-	-	-	-	-	-	-	-	-	-	-	24	-	-	-	-	-	-	-	-	24	-	-	-	-	-	-	-	-	C	204285-7	SELECTIVE GOLD	3	PIN ASSY .022 X .036 POST	18
-	-	-	-	-	-	-	-	-	-	-	-	-	-	-	-	-	-	-	-	-	-	-	-	-	-	-	-	-	-	-	-	-	-	-	-	-	-	-	-	-	24	-	-	-	-	-	-	-	-	24	-	-	-	C	204285-6	TIN	1	PIN ASSY .022 X .036 POST	17
-	-	-	-	-	-	-	-	-	-	-	-	-	-	-	-	-	-	-	-	-	-	-	-	-	-	-	-	-	-	-	-	-	-	-	-	-	-	-	-	24	-	-	-	-	-	-	-	-	24	-	-	-	-	C	204285-5	TIN	2	PIN ASSY .022 X .036 POST	16
-	-	-	-	-	-	-	-	-	-	-	-	-	-	-	-	-	-	-	-	-	-	-	-	-	-	-	-	-	-	-	-	-	-	-	-	-	-	-	24	-	-	-	-	-	-	-	-	24	-	-	-	-	-	C	204285-4	TIN	3	PIN ASSY .022 X .036 POST	15
-	-	-	-	-	-	-	-	-	-	-	-	-	-	-	-	-	-	-	-	-	-	-	-	-	-	-	-	-	-	-	-	-	-	-	-	-	-	-	-	-	-	-	-	24	-	-	-	-	-	-	-	-	24	C	204285-3	GOLD/NICKEL	1	PIN ASSY .022 X .036 POST	14
-	-	-	-	-	-	-	-	-	-	-	-	-	-	-	-	-	-	-	-	-	-	-	-	-	-	-	-	-	-	-	-	-	-	-	-	-	-	-	-	-	-	-	24	-	-	-	-	-	-	-	-	24	-	C	204285-2	GOLD/NICKEL	2	PIN ASSY .022 X .036 POST	13
-	-	-	-	-	-	-	-	-	-	-	-	-	-	-	-	-	-	-	-	-	-	-	-	-	-	-	-	-	-	-	-	-	-	-	-	-	-	-	-	-	-	24	-	-	-	-	-	-	-	-	24	-	-	C	204285-1	GOLD/NICKEL	3	PIN ASSY .022 X .036 POST	12
-	-	-	-	-	-	-	-	-	-	-	-	-	-	-	-	-	-	-	-	-	-	-	-	24	-	-	-	-	-	-	-	-	24	-	-	-	-	-	-	-	-	-	-	-	-	-	-	-	-	-	-	-	-	C	1-205171-2	GOLD/NICKEL	3	PIN ASSY .025 X .025 POST	11
-	-	-	-	-	-	-	-	-	-	-	-	-	-	-	-	-	-	-	-	-	-	-	-	-	24	-	-	-	-	-	-	-	-	24	-	-	-	-	-	-	-	-	-	-	-	-	-	-	-	-	-	-	-	C	1-205171-1	GOLD/NICKEL	2	PIN ASSY .025 X .025 POST	10
-	-	-	-	-	-	-	-	-	-	-	-	-	-	-	-	-	-	-	-	-	-	-	-	-	-	24	-	-	-	-	-	-	-	-	24	-	-	-	-	-	-	-	-	-	-	-	-	-	-	-	-	-	-	C	1-205171-0	GOLD/NICKEL	1	PIN ASSY .025 X .025 POST	9
-	-	-	-	-	-	-	-	-	-	-	-	-	-	-	-	-	-	24	-	-	-	-	-	-	-	-	24	-	-	-	-	-	-	-	-	-	-	-	-	-	-	-	-	-	-	-	-	-	-	-	-	-	-	C	205171-9	SELECTIVE GOLD	3	PIN ASSY .025 X .025 POST	8
-	-	-	-	-	-	-	-	-	-	-	-	-	-	-	-	-	-	-	24	-	-	-	-	-	-	-	-	24	-	-	-	-	-	-	-	-	-	-	-	-	-	-	-	-	-	-	-	-	-	-	-	-	-	C	205171-8	SELECTIVE GOLD	2	PIN ASSY .025 X .025 POST	7
-	-	-	-	-	-	-	-	-	-	-	-	-	-	-	-	-	-	-	-	24	-	-	-	-	-	-	-	-	24	-	-	-	-	-	-	-	-	-	-	-	-	-	-	-	-	-	-	-	-	-	-	-	-	C	205171-7	SELECTIVE GOLD	1	PIN ASSY .025 X .025 POST	6
-	-	-	-	-	-	-	-	-	-	-	-	-	-	-	-	-	-	-	-	-	24	-	-	-	-	-	-	-	-	24	-	-	-	-	-	-	-	-	-	-	-	-	-	-	-	-	-	-	-	-	-	-	-	C	205171-3	TIN	3	PIN ASSY .025 X .025 POST	5
-	-	-	-	-	-	-	-	-	-	-	-	-	-	-	-	-	-	-	-	-	-	24	-	-	-	-	-	-	-	-	24	-	-	-	-	-	-	-	-	-	-	-	-	-	-	-	-	-	-	-	-	-	-	C	205171-2	TIN	2	PIN ASSY .025 X .025 POST	4
-	-	-	-	-	-	-	-	-	-	-	-	-	-	-	-	-	-	-	-	-	-	-	24	-	-	-	-	-	-	-	-	24	-	-	-	-	-	-	-	-	-	-	-	-	-	-	-	-	-	-	-	-	-	C	205171-1	TIN	1	PIN ASSY .025 X .025 POST	3
1	1	1	1	1	1	1	1	1	-	-	-	-	-	-	-	-	-	1	1	1	1	1	1	1	1	1	-	-	-	-	-	-	-	-	-	1	1	1	1	1	1	1	1	1	-	-	-	-	-	-	-	-	-	D	2-204282-4	DIALLYL PHTHALATE-BLUE	-	BLOCK	2
-	-	-	-	-	-	-	-	-	1	1	1	1	1	1	1	1	1	-	-	-	-	-	-	-	-	-	1	1	1	1	1	1	1	1	1	-	-	-	-	-	-	-	-	-	1	1	1	1	1	1	1	1	1	D	204282-4	PHENOLIC-BLACK	-	BLOCK	1
OBS	OBS	OBS	OBS	OBS	OBS	OBS	OBS	OBS	OBS	OBS	OBS	OBS	OBS	OBS	OBS	OBS	OBS	OBS	OBS	OBS		OBS			OBS	OBS		OBS	OBS		OBS			OBS		OBS	OBS	OBS	OBS	OBS	OBS	OBS	OBS	OBS	OBS	OBS	OBS	OBS	OBS	OBS	OBS	OBS	OBS						

THIS DRAWING IS A CONTROLLED DOCUMENT FOR AMP INCORPORATED. IT IS SUBJECT TO CHANGE AND THE CONTROLLING ENGINEERING ORGANIZATION SHOULD BE CONTACTED FOR THE LATEST REVISION.

DIMENSIONS: IN [mm]

TOLERANCES UNLESS OTHERWISE SPECIFIED:
0 PLC ±-
1 PLC ±-
2 PLC ±-
3 PLC ±-
4 PLC ±-
ANGLES ±-

MATERIAL -
FINISH -

DWN T. THOMPSON 09-08-95
CHK D. MUMMEY 09-08-95
APVD D. MUMMEY 09-08-95
PRODUCT SPEC -
APPLICATION SPEC -
WEIGHT -

AMP
AMP Incorporated
Harrisburg, PA 17105-3608

NAME
24 POSITION, HDR, RECEPTACLE W/ JACKSCREW

SIZE	CAGE CODE	DRAWING NO
A1	00779	C-204684

CUSTOMER DRAWING
SCALE 8:1
SHEET 2 OF 3
REV K

AMP 4805 REV 10/93

30-JUL-02 15:10:18 amp16412/home/amp16412/docmod

THIS DRAWING IS UNPUBLISHED. RELEASED FOR PUBLICATION ,19 .
© COPYRIGHT 19 BY AMP INCORPORATED. ALL RIGHTS RESERVED.

LOC	DIST
DF	CO

REVISIONS

P	LTR	DESCRIPTION	DATE	DWN	APVD
	–	SEE SHT 1	–	–	–

7-3	7-2	7-1	7-0	6-9	6-8	6-7	6-6	6-5	6-4	6-3	6-2	6-1	6-0	5-9	5-8	5-7	5-6	5-5	DWG SIZE	PART NO	REMARKS	TERMINATIONS	DESCRIPTION	ITEM NO
1	1	1	1	1	1	1	1	1	1	1	1	1	1	1	1	1	1	1	A	204299-1	FEMALE	–	JACKSCREW ASSY KIT	39
–	–	–	–	–	–	–	24	–	–	–	–	–	–	–	–	24	–	–	C	1-205172-2	GOLD/NICKEL	3	SOCKET ASSY .025 X .025 POST	38
–	–	–	–	–	–	–	–	24	–	–	–	–	–	–	–	–	24	–	C	1-205172-1	GOLD/NICKEL	2	SOCKET ASSY .025 X .025 POST	37
–	–	–	–	–	–	–	–	–	24	–	–	–	–	–	–	–	–	24	C	1-205172-0	GOLD/NICKEL	1	SOCKET ASSY .025 X .025 POST	36
–	24	–	–	–	–	–	–	–	–	24	–	–	–	–	–	–	–	–	C	205172-9	SELECTIVE GOLD	3	SOCKET ASSY .025 X .025 POST	35
–	–	24	–	–	–	–	–	–	–	–	24	–	–	–	–	–	–	–	C	205172-8	SELECTIVE GOLD	2	SOCKET ASSY .025 X .025 POST	34
–	–	–	24	–	–	–	–	–	–	–	–	24	–	–	–	–	–	–	C	205172-7	SELECTIVE GOLD	1	SOCKET ASSY .025 X .025 POST	33
–	–	–	–	24	–	–	–	–	–	–	–	–	24	–	–	–	–	–	C	205172-3	TIN	3	SOCKET ASSY .025 X .025 POST	32
–	–	–	–	–	24	–	–	–	–	–	–	–	–	24	–	–	–	–	C	205172-2	TIN	2	SOCKET ASSY .025 X .025 POST	31
–	–	–	–	–	–	24	–	–	–	–	–	–	–	–	24	–	–	–	C	205172-1	TIN	1	SOCKET ASSY .025 X .025 POST	30
–	–	–	–	–	–	–	–	–	–	–	–	–	–	–	–	–	–	–	C	204292-9	SELECTIVE GOLD	3	SOCKET ASSY .022 X .036 POST	29
–	–	–	–	–	–	–	–	–	–	–	–	–	–	–	–	–	–	–	C	204292-8	SELECTIVE GOLD	2	SOCKET ASSY .022 X .036 POST	28
–	–	–	–	–	–	–	–	–	–	–	–	–	–	–	–	–	–	–	C	204292-7	SELECTIVE GOLD	1	SOCKET ASSY .022 X .036 POST	27
–	–	–	–	–	–	–	–	–	–	–	–	–	–	–	–	–	–	–	C	204292-6	NICKEL	3	SOCKET ASSY .022 X .036 POST	26
–	–	–	–	–	–	–	–	–	–	–	–	–	–	–	–	–	–	–	C	204292-5	NICKEL	2	SOCKET ASSY .022 X .036 POST	25
–	–	–	–	–	–	–	–	–	–	–	–	–	–	–	–	–	–	–	C	204292-4	NICKEL	1	SOCKET ASSY .022 X .036 POST	24
–	–	–	–	–	–	–	–	–	–	–	–	–	–	–	–	–	–	–	C	204292-3	GOLD/NICKEL	3	SOCKET ASSY .022 X .036 POST	23
–	–	–	–	–	–	–	–	–	–	–	–	–	–	–	–	–	–	–	C	204292-2	GOLD/NICKEL	2	SOCKET ASSY .022 X .036 POST	22
–	–	–	–	–	–	–	–	–	–	–	–	–	–	–	–	–	–	–	C	204292-1	GOLD/NICKEL	1	SOCKET ASSY .022 X .036 POST	21
–	–	–	–	–	–	–	–	–	–	–	–	–	–	–	–	–	–	–	C	204285-9	SELECTIVE GOLD	1	PIN ASSY .022 X .036 POST	20
–	–	–	–	–	–	–	–	–	–	–	–	–	–	–	–	–	–	–	C	204285-8	SELECTIVE GOLD	2	PIN ASSY .022 X .036 POST	19
–	–	–	–	–	–	–	–	–	–	–	–	–	–	–	–	–	–	–	C	204285-7	SELECTIVE GOLD	3	PIN ASSY .022 X .036 POST	18
–	–	–	–	–	–	–	–	–	–	–	–	–	–	–	–	–	–	–	C	204285-6	TIN	1	PIN ASSY .022 X .036 POST	17
–	–	–	–	–	–	–	–	–	–	–	–	–	–	–	–	–	–	–	C	204285-5	TIN	2	PIN ASSY .022 X .036 POST	16
–	–	–	–	–	–	–	–	–	–	–	–	–	–	–	–	–	–	–	C	204285-4	TIN	3	PIN ASSY .022 X .036 POST	15
–	–	–	–	–	–	–	–	–	–	–	–	–	–	–	–	–	–	–	C	204285-3	GOLD/NICKEL	1	PIN ASSY .022 X .036 POST	14
–	–	–	–	–	–	–	–	–	–	–	–	–	–	–	–	–	–	–	C	204285-2	GOLD/NICKEL	2	PIN ASSY .022 X .036 POST	13
–	–	–	–	–	–	–	–	–	–	–	–	–	–	–	–	–	–	–	C	204285-1	GOLD/NICKEL	3	PIN ASSY .022 X .036 POST	12
–	–	–	–	–	–	–	–	–	–	–	–	–	–	–	–	–	–	–	C	1-205171-2	GOLD/NICKEL	3	PIN ASSY .025 X .025 POST	11
24	–	–	–	–	–	–	–	–	–	–	–	–	–	–	–	–	–	–	C	1-205171-1	GOLD/NICKEL	2	PIN ASSY .025 X .025 POST	10
–	–	–	–	–	–	–	–	–	–	–	–	–	–	–	–	–	–	–	C	1-205171-0	GOLD/NICKEL	1	PIN ASSY .025 X .025 POST	9
–	–	–	–	–	–	–	–	–	–	–	–	–	–	–	–	–	–	–	C	205171-9	SELECTIVE GOLD	3	PIN ASSY .025 X .025 POST	8
–	–	–	–	–	–	–	–	–	–	–	–	–	–	–	–	–	–	–	C	205171-8	SELECTIVE GOLD	2	PIN ASSY .025 X .025 POST	7
–	–	–	–	–	–	–	–	–	–	–	–	–	–	–	–	–	–	–	C	205171-7	SELECTIVE GOLD	1	PIN ASSY .025 X .025 POST	6
–	–	–	–	–	–	–	–	–	–	–	–	–	–	–	–	–	–	–	C	205171-3	TIN	3	PIN ASSY .025 X .025 POST	5
–	–	–	–	–	–	–	–	–	–	–	–	–	–	–	–	–	–	–	C	205171-2	TIN	2	PIN ASSY .025 X .025 POST	4
–	–	–	–	–	–	–	–	–	–	–	–	–	–	–	–	–	–	–	C	205171-1	TIN	1	PIN ASSY .025 X .025 POST	3
1	1	1	1	1	1	1	1	1	1	–	–	–	–	–	–	–	–	–	D	2-204282-4	DIALLYL PHTHALATE-BLUE	–	BLOCK	2
–	–	–	–	–	–	–	–	–	–	1	1	1	1	1	1	1	1	1	D	204282-4	PHENOLIC-BLACK	–	BLOCK	1

OBS

THIS DRAWING IS A CONTROLLED DOCUMENT FOR AMP INCORPORATED. IT IS SUBJECT TO CHANGE AND THE CONTROLLING ENGINEERING ORGANIZATION SHOULD BE CONTACTED FOR THE LATEST REVISION.

DIMENSIONS: IN [mm]

TOLERANCES UNLESS OTHERWISE SPECIFIED.
0 PLC ±–
1 PLC ±–
2 PLC ±–
3 PLC ±–
4 PLC ±–
ANGLES ±–

MATERIAL –
FINISH –

DWN T. THOMPSON 09-08-95
CHK D. MUMMEY 09-08-95
APVD D. MUMMEY 09-08-95
PRODUCT SPEC –
APPLICATION SPEC –
WEIGHT –

AMP Incorporated
Harrisburg, PA 17105-3608

NAME 24 POSITION, HDR, RECEPTACLE W/ JACKSCREW

SIZE	CAGE CODE	DRAWING NO
A1	00779	C-204684

CUSTOMER DRAWING

SCALE	SHEET	OF	REV
8:1	3	3	K