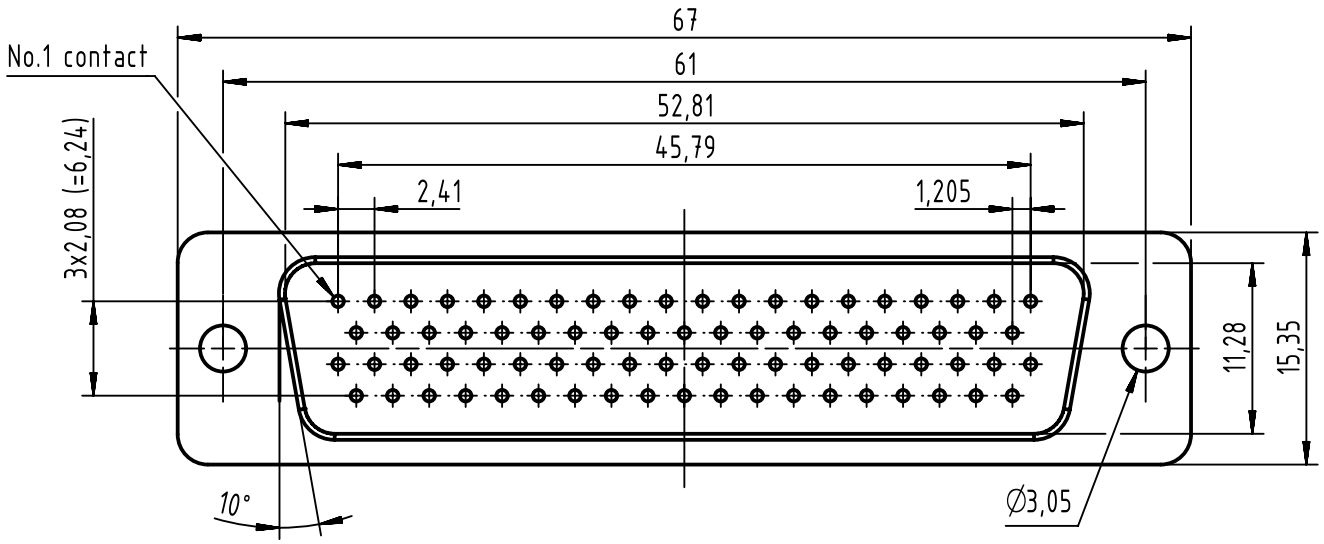

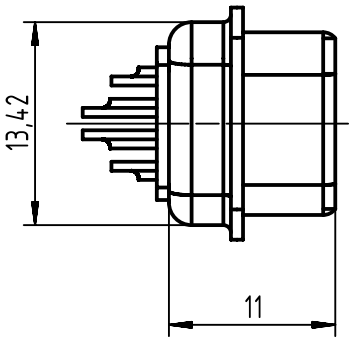

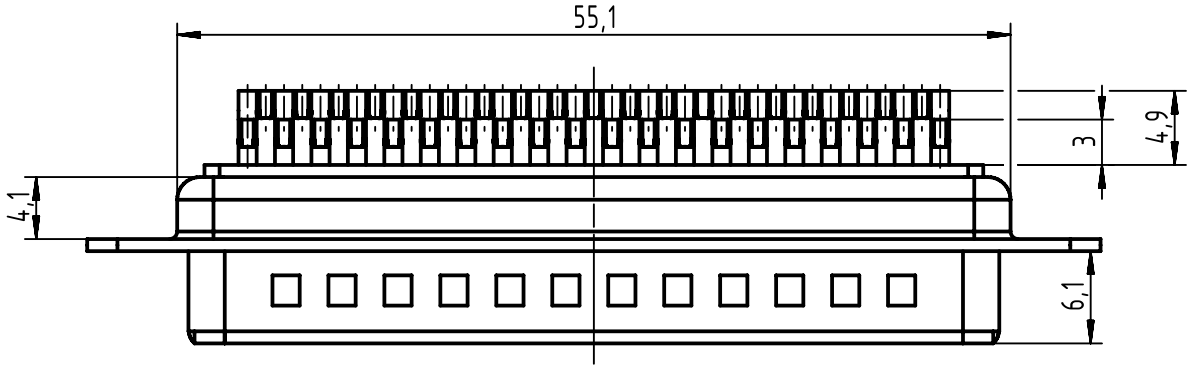

Entry hole type: stamped contact

0956 500 5615 050	S4
Part number	Performance level

All Dimensions in mm
Original Size DIN A4

Scale 2:1

Free size tol.

Ref.

Sub.

All rights reserved

Department EC PD - CN

HARTING Electronics GmbH
D-32339 Espelkamp

Created by	Inspected by	Standardisation	Date	State
ZHUANGJ	LUOK	SCHREIER	2016-12-14	Final Release

Title: D-Sub HD 78-pole male straight solder cup

Doc-Key / ECM-Nr.
100513288/UGD/001/B
500000112410

Type: TB

Number: 09565005615050

Rev.: B

Page: 1/1

A4