FAIRCHILD SEMICONDUCTOR™

April 1991
Revised June 2001

74FR9245
9-Bit Bidirectional Transceiver with 3-STATE Outputs

General Description

The 74FR9245 contains nine non-inverting bidirectional buffers with 3-STATE outputs and is intended for bus-oriented applications. Current sinking capability is 64 mA on both the A and B Ports. The Transmit/Receive (T/$\overline{R}$) input determines the direction of data flow through the bidirectional transceiver. Transmit (active-HIGH) enables data from A Ports to B Ports; Receive (active-LOW) enables data from B Ports to A Ports. The Output Enable input, when HIGH, disables both A and B Ports by placing them in a High Z condition.

Features

- Non-inverting buffers
- Bidirectional data path
- A and B output sink capability of 64 mA, source capability of 15 mA
- Guaranteed pin-to-pin skew, multiple output switching and 250 pf delay

Ordering Code:

Order Number	Package Number	Package Description
74FR9245SC	M24B	24-Lead Small Outline Integrated Circuit (SOIC), JEDEC MS-013, 0.300" Wide
74FR9245MSA	MSA24	24-Lead Shrink Small Outline Package (SSOP), EIAJ TYPE II, 5.3mm Wide
74FR9245SPC	N24C	24-Lead Plastic Dual-In-Line Package (PDIP), JEDEC MS-001, 0.300" Wide

Devices also available in Tape and Reel. Specify by appending the suffix letter "X" to the ordering code.

Logic Symbol

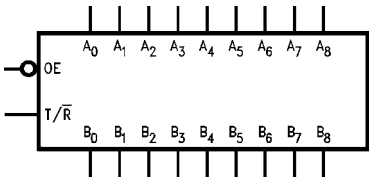

Connection Diagram

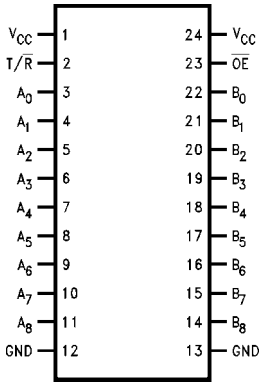

Pin Descriptions

Pin Names	Description
$\overline{OE}$	Output Enable Input (Active-LOW)
T/$\overline{R}$	Transmit/Receive Input
A_0–A_8	Side A Inputs or 3-STATE Outputs
B_0–B_8	Side B Inputs or 3-STATE Outputs

Truth Table

Inputs		Output
$\overline{OE}$	T/$\overline{R}$	
L	L	Bus B Data to Bus A
L	H	Bus A Data to Bus B
H	X	High Z State

H = HIGH Voltage Level
L = LOW Voltage Level
X = Immaterial

© 2001 Fairchild Semiconductor Corporation

Logic Diagram

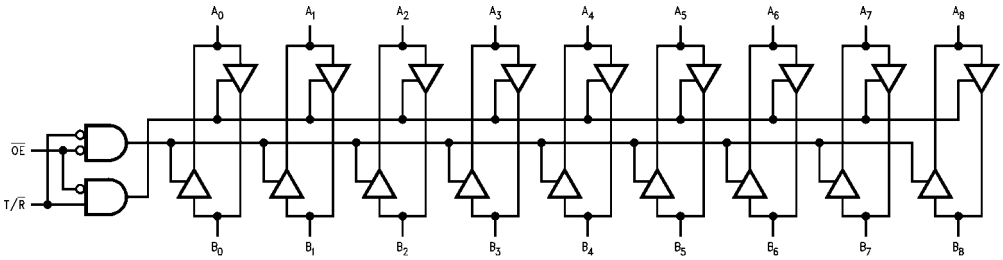

Absolute Maximum Ratings(Note 1)

Storage Temperature	–65°C to +150°C
Ambient Temperature under Bias	–55°C to +125°C
Junction Temperature under Bias	–55°C to +150°C
V_{CC} Pin Potential to Ground Pin	–0.5V to +7.0V
Input Voltage (Note 2)	–0.5V to +7.0V
Input Current (Note 2)	–30 mA to +5.0 mA
Voltage Applied to Output	
in HIGH State (with V_{CC} = 0V)	
Standard Output	–0.5V to V_{CC}
3-STATE Output	–0.5V to +5.5V
Current Applied to Output	
in LOW State (Max)	twice the rated I_{OL} (mA)
ESD Last Passing Voltage (Min)	4000V

Recommended Operating Conditions

Free Air Ambient Temperature	0°C to +70°C
Supply Voltage	+4.5V to +5.5V

Note 1: Absolute maximum ratings are value beyond which the device may be damaged or have its useful life impaired. Functional operation under these conditions is not implied.

Note 2: Either voltage limit or current limit is sufficient to protect inputs.

DC Electrical Characteristics

Symbol	Parameter	Min	Typ	Max	Units	V_{CC}	Conditions
V_{IH}	Input HIGH Voltage	2.0			V		Recognized HIGH Signal
V_{IL}	Input LOW Voltage			0.8	V		Recognized LOW Signal
V_{CD}	Input Clamp Diode Voltage			–1.2	V	Min	I_{IN} = –18 mA
V_{OH}	Output HIGH Voltage	2.4			V	Min	I_{OH} = –3 mA (A_n, B_n)
		2.0			V	Min	I_{OH} = –15 mA (A_n, B_n)
V_{OL}	Output LOW Voltage			0.55	V	Min	I_{OL} = 64 mA (A_n, B_n)
I_{IH}	Input HIGH Current			5	µA	Max	V_{IN} = 2.7V ($\overline{OE}$, T/$\overline{R}$)
I_{BVI}	Input HIGH Current Breakdown Test			7	µA	Max	V_{IN} = 7.0V ($\overline{OE}$, T/$\overline{R}$)
I_{BVIT}	Input HIGH Current Breakdown Test (I/O)			100	µA	Max	V_{IN} = 5.5V (A_n, B_n)
I_{IL}	Input LOW Current			–250	µA	Max	V_{IN} = 0.5V ($\overline{OE}$, T/$\overline{R}$)
V_{ID}	Input Leakage Test	4.75			V	0.0	I_{ID} = 1.9 µA All Other Pins Grounded
I_{OD}	Output Circuit Leakage Current			3.75	µA	0.0	V_{IOD} = 150 mV All Other Pins Grounded
I_{IH} + I_{OZH}	Output Leakage Current			25	µA	Max	V_{OUT} = 2.7V (A_n, B_n)
I_{IL} + I_{OZL}	Output Leakage Current			–150	µA	Max	V_{OUT} = 0.5V (A_n, B_n)
I_{OS}	Output Short-Circuit Current	–100		–225	mA	Max	V_{OUT} = 0.0V (A_n, B_n)
I_{CEX}	Output HIGH Leakage Current			50	µA	Max	V_{OUT} = V_{CC} (A_n, B_n)
I_{ZZ}	Bus Drainage Test			100	µA	0.0	V_{OUT} = 5.25V (A_n, B_n)
I_{CCH}	Power Supply Current		55	80	mA	Max	All Outputs HIGH
I_{CCL}	Power Supply Current		75	115	mA	Max	All Outputs LOW
I_{CCZ}	Power Supply Current		65	85	mA	Max	Outputs 3-STATE
C_{IN}	Input Capacitance		8.0		pF	5.0	$\overline{OE}$, T/$\overline{R}$
			17.0		pF	5.0	A_n, B_n

AC Electrical Characteristics

Symbol	Parameter	$T_A = +25°C$, $V_{CC} = +5.0V$, $C_L = 50$ pF			$T_A = 0°C$ to $+70°C$, $V_{CC} = +50V$, $C_L = 50$ pF		Units
		Min	Typ	Max	Min	Max	
t_{PLH}	Propagation Delay	1.0	2.6	3.9	1.0	3.9	ns
t_{PHL}	A_n to B_n or B_n to A_n	1.0	1.7	3.9	1.0	3.9	
t_{PZH}	Output Enable Time	2.7	5.0	6.5	2.7	6.5	ns
t_{PZL}		2.7	4.3	6.5	2.7	6.5	
t_{PHZ}	Output Disable Time	1.7	3.7	6.0	1.7	6.0	ns
t_{PLZ}		1.7	3.6	6.0	1.7	6.0	

Extended AC Electrical Characteristics

Symbol	Parameter	$T_A = 0°C$ to $+70°C$, $V_{CC} = +50V$, $C_L = 50$ pF, Eight Outputs Switching (Note 3)		$T_A = 0°C$ to $+70°C$, $V_{CC} = +50V$, $C_L = 250$ pF (Note 4)		Units
		Min	Max	Min	Max	
t_{PLH}	Propagation Delay	1.0	5.8	2.2	8.1	ns
t_{PHL}	A_n to B_n or B_n to A_n	1.0	5.8	2.2	8.1	
t_{PZH}	Output Enable Time	2.7	8.8			ns
t_{PZL}		2.7	8.8			
t_{PHZ}	Output Disable Time	1.7	7.0			ns
t_{PLZ}		1.7	7.0			
t_{OSHL} (Note 5)	Pin-to-Pin Skew for HL Transitions		2.0			ns
t_{OSLH} (Note 5)	Pin-to-Pin Skew for LH Transitions		1.0			ns
t_{OST} (Note 5)	Pin-to-Pin Skew for HL/LH Transitions		3.0			ns

Note 3: This specification is guaranteed but not tested. The limits apply to propagation delays for all paths described switching in phase, i.e., all LOW-to-HIGH, HIGH-to-LOW, 3-STATE-to-HIGH, etc.

Note 4: These specifications guaranteed but not tested. The limits represent propagation delays with 250 pF load capacitors in place of the 50 pF load capacitors in the standard AC load. This specification pertains to single output switching only.

Note 5: Skew is defined as the absolute value of the difference between the actual propagation delays for any two outputs of the same device. The specification applies to any outputs switching HIGH-to-LOW (t_{OSHL}), LOW-to-HIGH (t_{OSLH}), or HIGH-to-LOW and/or LOW-to-HIGH (t_{OST}). Specifications guaranteed with all outputs switching in phase.

Physical Dimensions inches (millimeters) unless otherwise noted

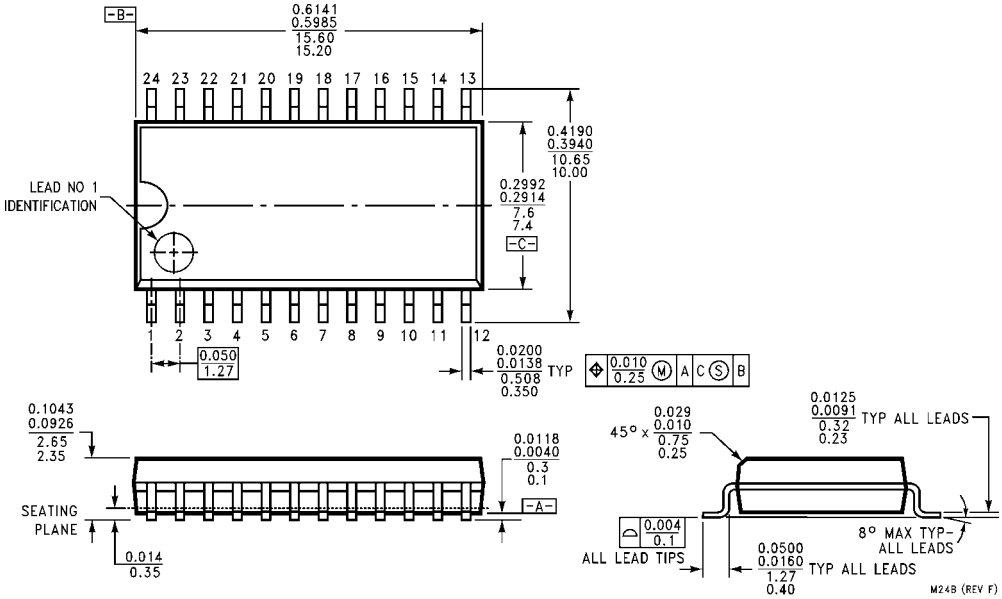

24-Lead Small Outline Integrated Circuit (SOIC), JEDEC MS-013, 0.300" Wide
Package Number M24B

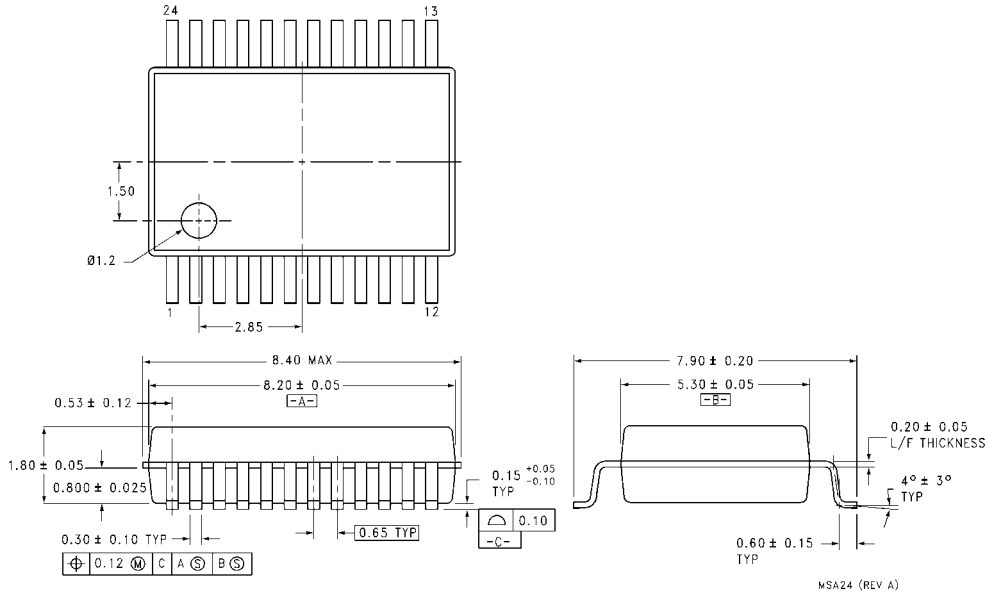

24-Lead Shrink Small Outline Package (SSOP), EIAJ TYPE II, 5.3mm Wide
Package Number MSA24

Physical Dimensions inches (millimeters) unless otherwise noted (Continued)

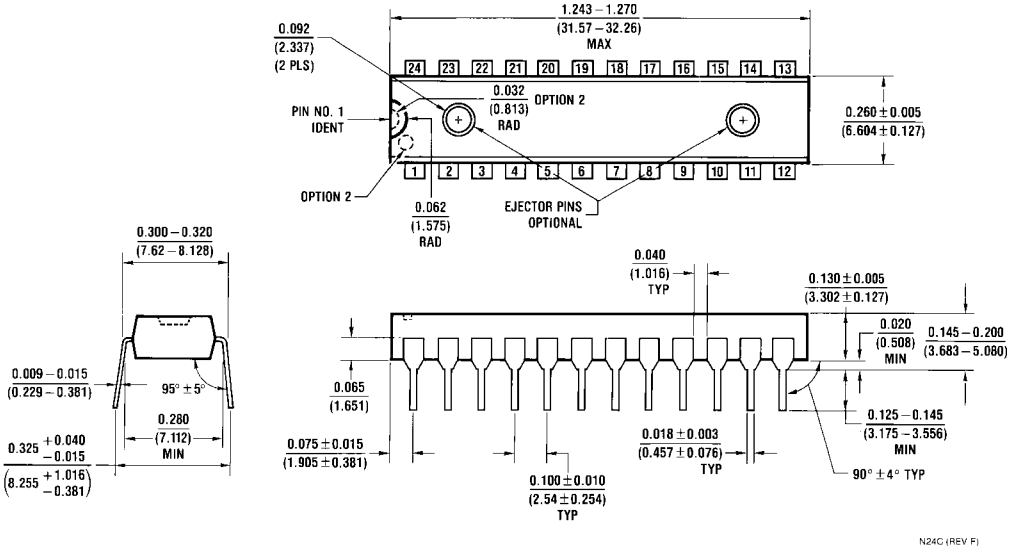

24-Lead Plastic Dual-In-Line Package (PDIP), JEDEC MS-001, 0.300" Wide
Package Number N24C

Fairchild does not assume any responsibility for use of any circuitry described, no circuit patent licenses are implied and Fairchild reserves the right at any time without notice to change said circuitry and specifications.

LIFE SUPPORT POLICY

FAIRCHILD'S PRODUCTS ARE NOT AUTHORIZED FOR USE AS CRITICAL COMPONENTS IN LIFE SUPPORT DEVICES OR SYSTEMS WITHOUT THE EXPRESS WRITTEN APPROVAL OF THE PRESIDENT OF FAIRCHILD SEMICONDUCTOR CORPORATION. As used herein:

1. Life support devices or systems are devices or systems which, (a) are intended for surgical implant into the body, or (b) support or sustain life, and (c) whose failure to perform when properly used in accordance with instructions for use provided in the labeling, can be reasonably expected to result in a significant injury to the user.
2. A critical component in any component of a life support device or system whose failure to perform can be reasonably expected to cause the failure of the life support device or system, or to affect its safety or effectiveness.

www.fairchildsemi.com