- **Mechanically and Functionally Interchangeable With DM71/81LS97 and DM71/81LS98**
- **P-N-P Inputs Reduce Bus Loading**
- **3-State Outputs Rated at I_{OL} of 12 mA and 24 mA for SN54ALS' and SN74ALS', Respectively**
- **Package Options Include Plastic Small Outline Packages, Ceramic Chip Carriers, and Standard Plastic and Ceramic 300-mil DIPs**
- **Dependable Texas Instruments Quality and Reliability**

DEVICE	DATA PATH
'ALS465A	True
'ALS466A	Inverting
'ALS467A	True
'ALS468A	Inverting

SN54ALS465A, SN54ALS466A . . . J PACKAGE
SN74ALS465A, SN74ALS466A . . . DW OR N PACKAGE
(TOP VIEW)

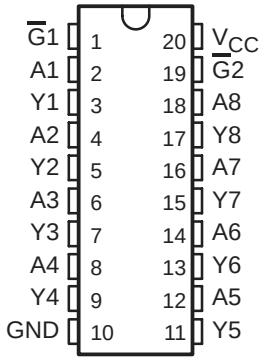

SN54ALS465A, SN54ALS466A . . . FK PACKAGE
(TOP VIEW)

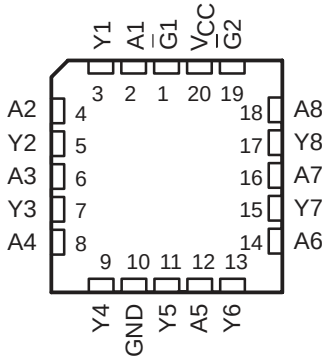

description

These octal buffers utilize the latest advanced low-power Schottky technology. The 'ALS465A and 'ALS466A have a two-input active-low AND enable gate controlling all eight data buffers. The 'ALS467A and 'ALS468A have two separate active-low enable inputs each controlling four data buffers. In each case, a high level on any $\overline{G}$ places the affected outputs at high impedance.

The SN54ALS465A, SN54ALS466A, SN54ALS467A, and SN54ALS468A are characterized for operation over the full military temperature range of −55°C to 125°C. The SN74ALS465A, SN74ALS466A, SN74ALS467A, and SN74ALS468A are characterized for operation from 0°C to 70°C.

SN54ALS467A, SN54ALS468A . . . J PACKAGE
SN74ALS467A, SN74ALS468A . . . DW OR N PACKAGE
(TOP VIEW)

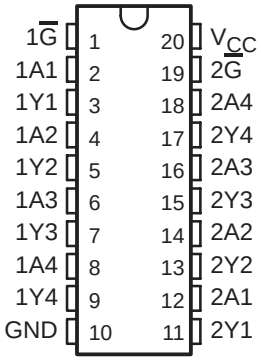

SN54ALS467A, SN54ALS468A . . . FK PACKAGE
(TOP VIEW)

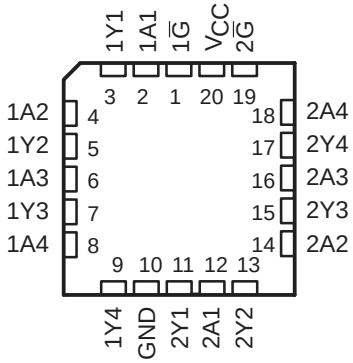

PRODUCTION DATA information is current as of publication date. Products conform to specifications per the terms of Texas Instruments standard warranty. Production processing does not necessarily include testing of all parameters.

Copyright © 1986, Texas Instruments Incorporated
5basic

logic symbols†

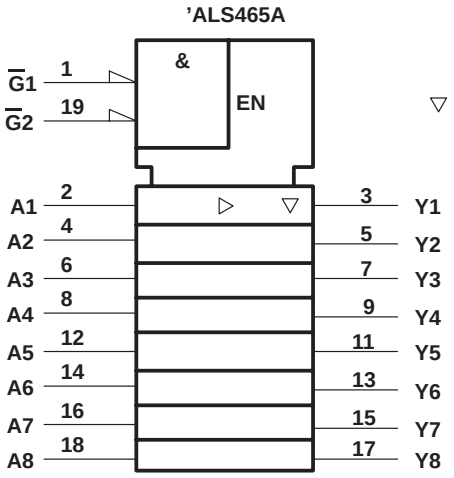

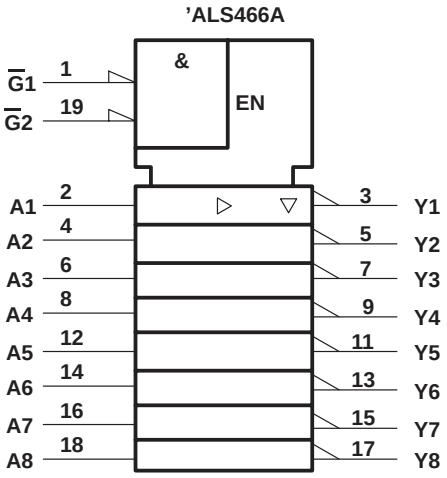

logic diagrams (positive logic)

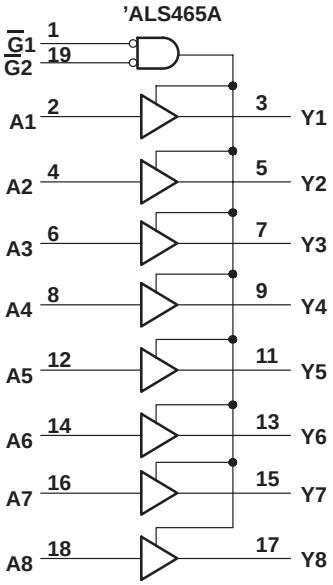

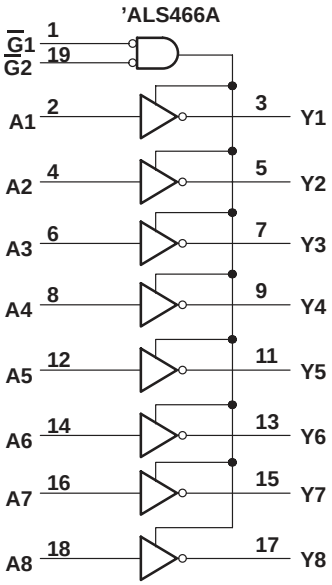

† These symbols are in accordance with ANSI/IEEE Std 91-1984 and IEC Publication 617-12.
Pin numbers shown are for DW, J, and N packages.

logic symbols†

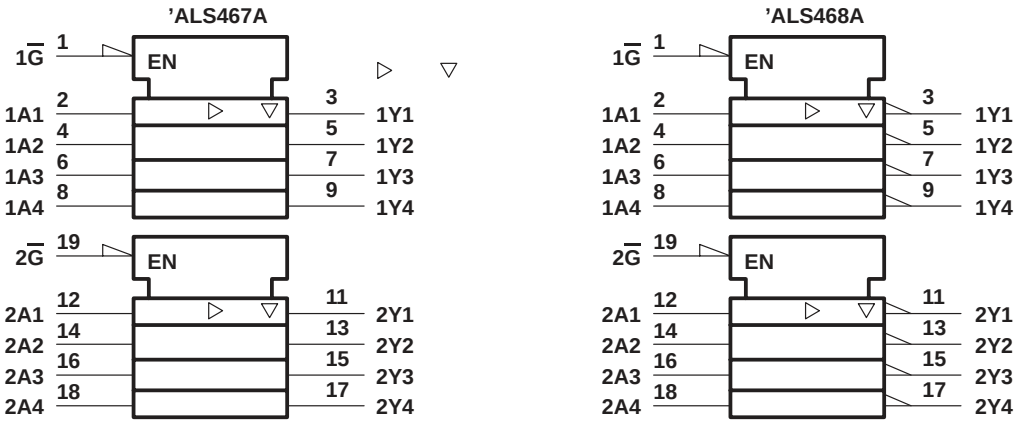

logic diagrams (positive logic)

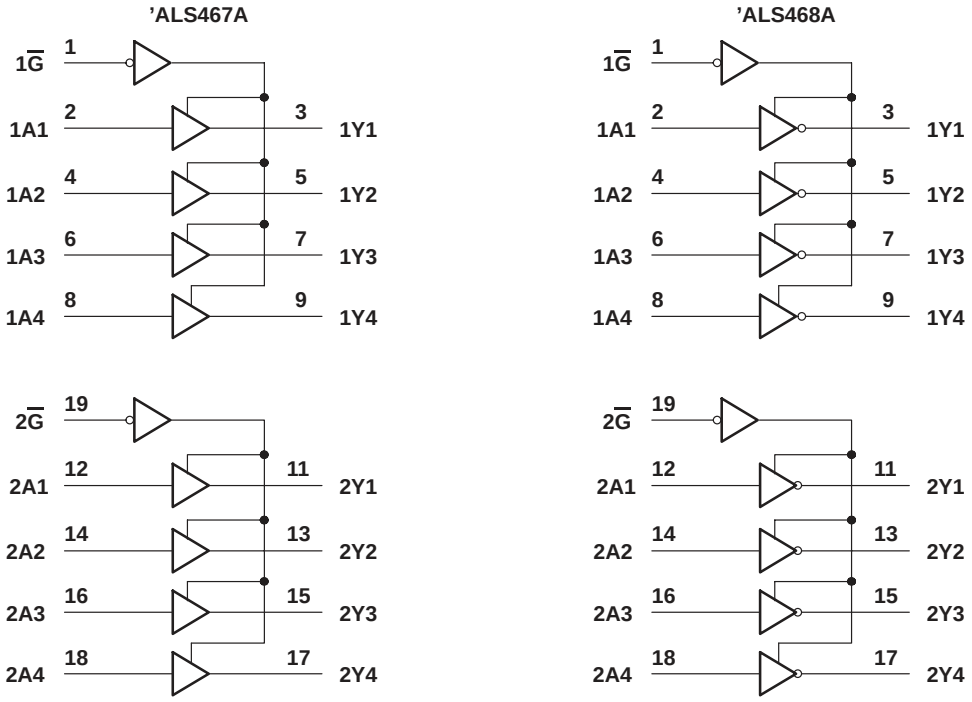

† These symbols are in accordance with ANSI/IEEE Std 91-1984 and IEC Publication 617-12.
Pin numbers shown are for DW, J, and N packages.

absolute maximum ratings over operating free-air temperature range (unless otherwise noted)

Supply voltage, V_{CC} . . . . . 7 V
Input voltage . . . . . 7 V
Voltage applied to a disabled 3-state output . . . . . 5.5 V
Operating free-air temperature range: SN54ALS465A thru SN54ALS468A . . . . . −55°C to 125°C
SN74ALS465A thru SN74ALS468A . . . . . 0°C to 70°C
Storage temperature range . . . . . −65°C to 150°C

recommended operating conditions

		SN54ALS465A THRU SN54ALS468A			SN74ALS465A THRU SN74ALS468A			UNIT
		MIN	NOM	MAX	MIN	NOM	MAX	
V_{CC}	Supply voltage	4.5	5	5.5	4.5	5	5.5	V
V_{IH}	High-level input voltage	2			2			V
V_{IL}	Low-level input voltage			0.7			0.8	V
I_{OH}	High-level output current			−12			−15	mA
I_{OL}	Low-level output current			12			24	mA
							48†	
T_A	Operating free-air temperature	−55		125	0		70	°C

† The extended limit applies only if V_{CC} is maintained between 4.75 V and 5.25 V.
The 48-mA limit applies for SN74ALS465A-1, SN74ALS466A-1, SN74ALS467A-1, and SN74ALS468A-1 only.

electrical characteristics over recommended operating free-air temperature range (unless otherwise noted)

PARAMETER		TEST CONDITIONS		SN54ALS465A THRU SN54ALS468A			SN74ALS465A THRU SN74ALS468A			UNIT
				MIN	TYP‡	MAX	MIN	TYP‡	MAX	
V_{IK}		V_{CC} = 4.5 V,	I_I = −18 mA			−1.5			−1.5	V
V_{OH}		V_{CC} = 4.5 V to 5.5 V,	I_{OH} = −0.4 mA	V_{CC}−2			V_{CC}−2			V
		V_{CC} = 4.5 V,	I_{OH} = −3 mA	2.4	3.2		2.4	3.2		
		V_{CC} = 4.5 V,	I_{OH} = −12 mA	2						
		V_{CC} = 4.5 V,	I_{OH} = −15 mA				2			
V_{OL}		V_{CC} = 4.5 V,	I_{OL} = 12 mA		0.25	0.4		0.25	0.4	V
		V_{CC} = 4.5 V, (I_{OL} = 48 mA −1 versions)	I_{OL} = 24 mA					0.35	0.5	
I_{OZH}		V_{CC} = 5.5 V,	V_O = 2. 7 V			20			20	µA
I_{OZL}		V_{CC} = 5.5 V,	V_O = 0.4 V			−20			−20	µA
I_I		V_{CC} = 5.5 V,	V_I = 7 V			0.1			0.1	mA
I_{IH}		V_{CC} = 5.5 V,	V_I = 2.7 V			20			20	µA
I_{IL}		V_{CC} = 5.5 V,	V_I = 0 .4 V			−0.1			−0.1	mA
I_O§		V_{CC} = 5.5 V,	V_O = 2.25 V	−30		−112	−30		−112	mA
I_{CC}	'ALS465A 'ALS467A	V_{CC} = 5.5 V	Outputs high		11	21		11	16	mA
			Outputs low		19	33		19	28	
			Outputs disabled		23	38		23	33	
	'ALS466A 'ALS468A	V_{CC} = 5.5 V	Outputs high		7	15		7	10	mA
			Outputs low		16	29		16	24	
			Outputs disabled		19	32		19	27	

‡ All typical values are at V_{CC} = 5 V, T_A = 25°C.
§ The output conditions have been chosen to produce a current that closely approximates one half of the true short-circuit output current, I_{OS}.

’ALS465A, ’ALS467A switching characteristics (see Note 1)

PARAMETER	FROM (INPUT)	TO (OUTPUT)	V_{CC} = 4.5 V to 5.5 V, C_L = 50 pF, R1 = 500 Ω, R2 = 500 Ω, T_A = MIN to MAX†				UNIT
			SN54ALS465A SN54ALS467A		SN74ALS465A SN74ALS467A		
			MIN	MAX	MIN	MAX	
t_{PLH}	A	Y	2	16	2	13	ns
t_{PHL}			4	15	4	12	
t_{PZH}	$\overline{G}$	Any Y	4	27	4	23	ns
t_{PZL}			5	30	5	25	
t_{PHZ}	$\overline{G}$	Any Y	2	12	2	10	ns
t_{PLZ}			3	21	3	18	

’ALS466A, ALS468A switching characteristics (see Note 1)

PARAMETER	FROM (INPUT)	TO (OUTPUT)	V_{CC} = 4.5 V to 5.5 V, C_L = 50 pF, R1 = 500 Ω, R2 = 500 Ω, T_A = MIN to MAX†				UNIT
			SN54ALS466A SN54ALS468A		SN74ALS466A SN74ALS468A		
			MIN	MAX	MIN	MAX	
t_{PLH}	A	Y	3	14	3	12	ns
t_{PHL}			2	11	2	9	
t_{PZH}	$\overline{G}$	Any Y	4	21	4	16	ns
t_{PZL}			7	25	7	23	
t_{PHZ}	$\overline{G}$	Any Y	2	12	2	10	ns
t_{PLZ}			2	20	2	17	

† For conditions shown as MIN or MAX, use the appropriate value specified under recommended operating conditions.
NOTE 1: Load circuit and voltage waveforms are shown in Section 1.

IMPORTANT NOTICE

Texas Instruments Incorporated and its subsidiaries (TI) reserve the right to make corrections, modifications, enhancements, improvements, and other changes to its products and services at any time and to discontinue any product or service without notice. Customers should obtain the latest relevant information before placing orders and should verify that such information is current and complete. All products are sold subject to TI's terms and conditions of sale supplied at the time of order acknowledgment.

TI warrants performance of its hardware products to the specifications applicable at the time of sale in accordance with TI's standard warranty. Testing and other quality control techniques are used to the extent TI deems necessary to support this warranty. Except where mandated by government requirements, testing of all parameters of each product is not necessarily performed.

TI assumes no liability for applications assistance or customer product design. Customers are responsible for their products and applications using TI components. To minimize the risks associated with customer products and applications, customers should provide adequate design and operating safeguards.

TI does not warrant or represent that any license, either express or implied, is granted under any TI patent right, copyright, mask work right, or other TI intellectual property right relating to any combination, machine, or process in which TI products or services are used. Information published by TI regarding third-party products or services does not constitute a license from TI to use such products or services or a warranty or endorsement thereof. Use of such information may require a license from a third party under the patents or other intellectual property of the third party, or a license from TI under the patents or other intellectual property of TI.

Reproduction of TI information in TI data books or data sheets is permissible only if reproduction is without alteration and is accompanied by all associated warranties, conditions, limitations, and notices. Reproduction of this information with alteration is an unfair and deceptive business practice. TI is not responsible or liable for such altered documentation. Information of third parties may be subject to additional restrictions.

Resale of TI products or services with statements different from or beyond the parameters stated by TI for that product or service voids all express and any implied warranties for the associated TI product or service and is an unfair and deceptive business practice. TI is not responsible or liable for any such statements.

TI products are not authorized for use in safety-critical applications (such as life support) where a failure of the TI product would reasonably be expected to cause severe personal injury or death, unless officers of the parties have executed an agreement specifically governing such use. Buyers represent that they have all necessary expertise in the safety and regulatory ramifications of their applications, and acknowledge and agree that they are solely responsible for all legal, regulatory and safety-related requirements concerning their products and any use of TI products in such safety-critical applications, notwithstanding any applications-related information or support that may be provided by TI. Further, Buyers must fully indemnify TI and its representatives against any damages arising out of the use of TI products in such safety-critical applications.

TI products are neither designed nor intended for use in military/aerospace applications or environments unless the TI products are specifically designated by TI as military-grade or "enhanced plastic." Only products designated by TI as military-grade meet military specifications. Buyers acknowledge and agree that any such use of TI products which TI has not designated as military-grade is solely at the Buyer's risk, and that they are solely responsible for compliance with all legal and regulatory requirements in connection with such use.

TI products are neither designed nor intended for use in automotive applications or environments unless the specific TI products are designated by TI as compliant with ISO/TS 16949 requirements. Buyers acknowledge and agree that, if they use any non-designated products in automotive applications, TI will not be responsible for any failure to meet such requirements.

Following are URLs where you can obtain information on other Texas Instruments products and application solutions:

Products		**Applications**	
Amplifiers	amplifier.ti.com	Audio	www.ti.com/audio
Data Converters	dataconverter.ti.com	Automotive	www.ti.com/automotive
DSP	dsp.ti.com	Broadband	www.ti.com/broadband
Clocks and Timers	www.ti.com/clocks	Digital Control	www.ti.com/digitalcontrol
Interface	interface.ti.com	Medical	www.ti.com/medical
Logic	logic.ti.com	Military	www.ti.com/military
Power Mgmt	power.ti.com	Optical Networking	www.ti.com/opticalnetwork
Microcontrollers	microcontroller.ti.com	Security	www.ti.com/security
RFID	www.ti-rfid.com	Telephony	www.ti.com/telephony
RF/IF and ZigBee® Solutions	www.ti.com/lprf	Video & Imaging	www.ti.com/video
		Wireless	www.ti.com/wireless

Mailing Address: Texas Instruments, Post Office Box 655303, Dallas, Texas 75265
Copyright © 2008, Texas Instruments Incorporated