ORDER NO.	WOODHEAD NO.	COLOR
130146-0219	25W47-P	YELLOW
130146-0220	25W47BLK-P	BLACK

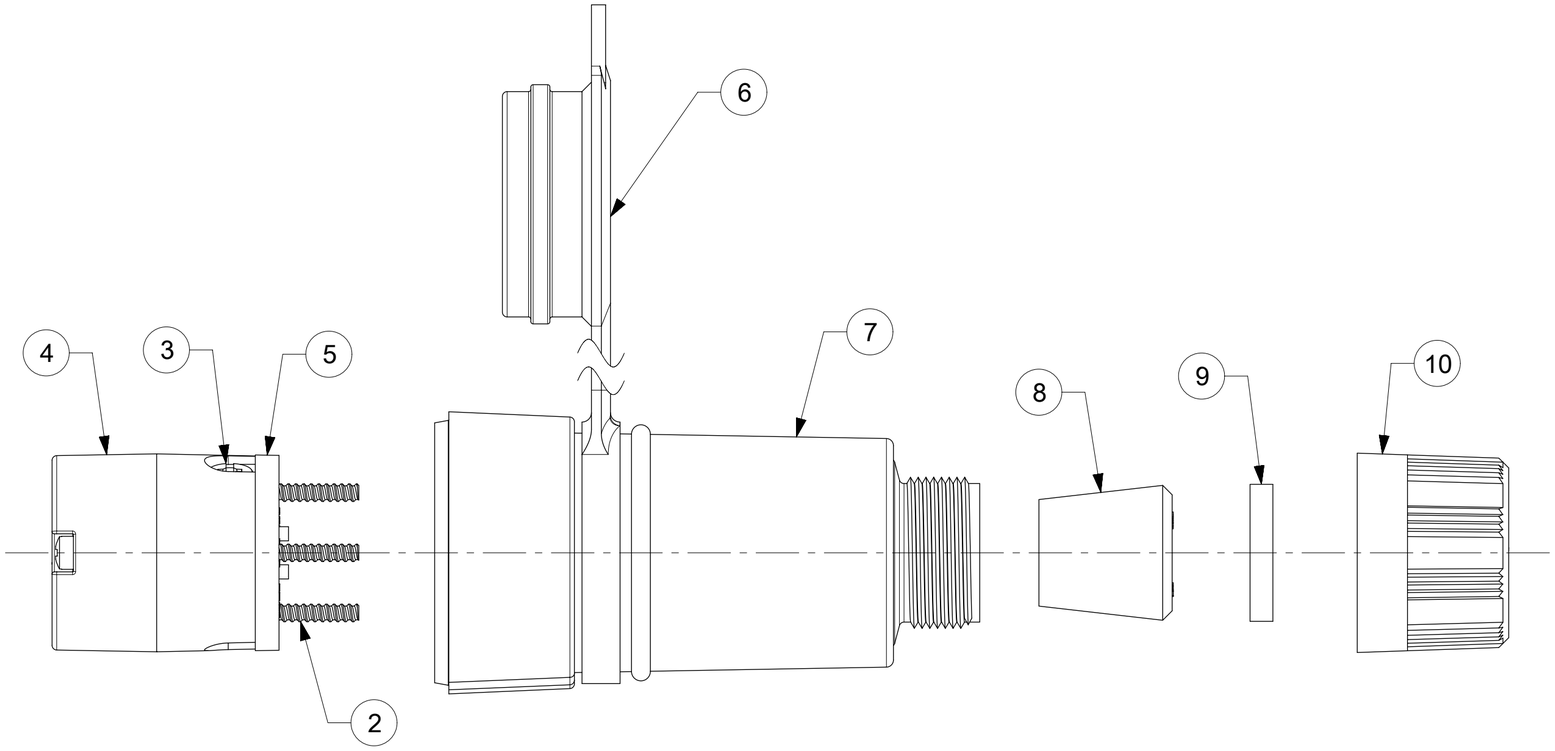

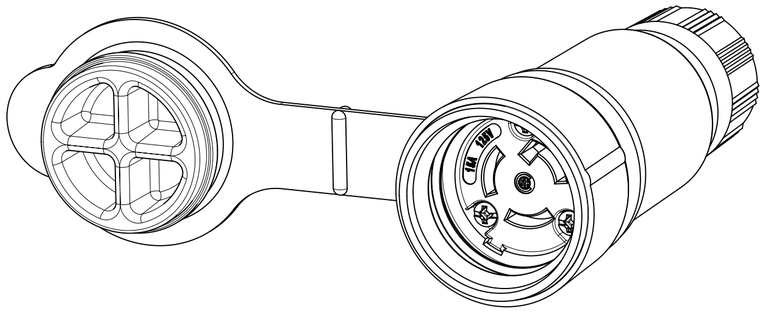

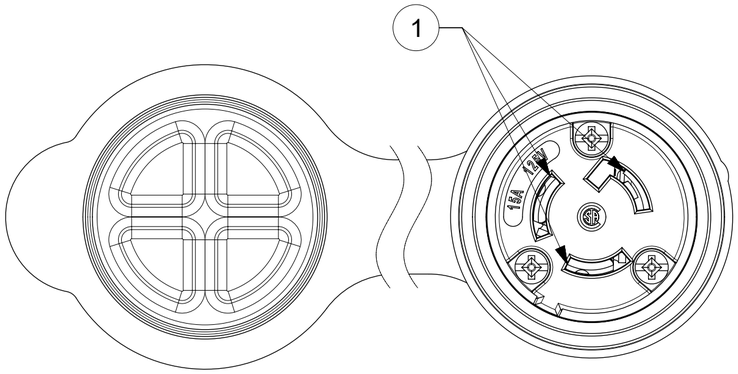

FACE VIEW

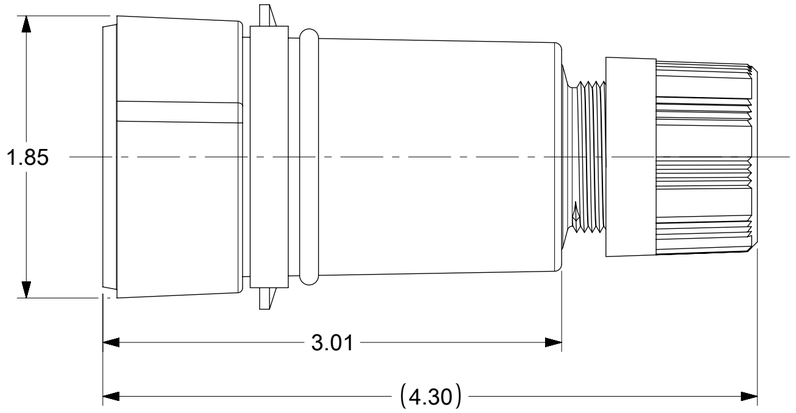

ITEM NO.	DESCRIPTIONS	MATERIAL	QTY.
1	BLADES	BRASS	3
2	RETAINING SCREWS	STAINLESS STEEL	3
3	TERMINAL SCREWS	BRASS, ZINC PLATED	3
4	INSERT	NYLON	1
5	TERMINAL COVER	POLYCARBONATE	1
6	FLIP COVER	SILICON	1
7	HOUSING	RUBBER WITH NYLON THREAD	1
8	GROMMETS	RUBBER	5
9	FRICTION RING	NYLON	1
10	COMPRESSION NUT	NYLON	1

DOCUMENT STATUS	P1	RELEASE DATE	2019/03/21 14:42:45

NOTES:
1. SEE INSTRUCTION SHEET NUMBER 1301414770 FOR PRODUCT SPECIFICATION.
2. CABLE RANGE FROM 0.375" TO 0.625"

THIS DRAWING CONTAINS INFORMATION THAT IS PROPRIETARY TO MOLEX ELECTRONIC TECHNOLOGIES, LLC AND SHOULD NOT BE USED WITHOUT WRITTEN PERMISSION

SYMBOLS: EA = 0; EC = 0; EP = 0; S = 0; ▼ = 0; C = 0; ☒ = 0; ■ = 0; V = 0

DIMENSION UNITS	SCALE
INCH	NTS

GENERAL TOLERANCES (UNLESS SPECIFIED)

ANGULAR TOL	±	0.5 °
4 PLACES	±	
3 PLACES	±	0.005
2 PLACES	±	0.01
1 PLACE	±	0.02
0 PLACES	±	

DRAFT WHERE APPLICABLE MUST REMAIN WITHIN DIMENSIONS

CURRENT REV DESC: RELEASED

EC NO: 613684
DRWN: ABABU01 2018/11/27
CHK'D: DNGUYEN62 2019/03/15
APPR: HKNEELAND 2019/03/21

INITIAL REVISION:
DRWN: ABABU01 2018/11/27
APPR: HKNEELAND 2019/03/21

THIRD ANGLE PROJECTION | DRAWING: C-SIZE | SERIES: 130146

molex

WATERTITE CONNECTOR, L5-15R

PRODUCT CUSTOMER DRAWING

DOCUMENT NUMBER	DOC TYPE	DOC PART	REVISION
1301460219	PSD	000	A

MATERIAL NUMBER	CUSTOMER	SHEET NUMBER
SEE TABLE	GENERAL MARKET	1 OF 1

FORMAT: tb-prod-C
REVISION: H
DATE: 2018/01/18