| PART NAME | IP67 SERIES NEMA DIE CAST ALUMINUM BOX | PART No. | IPS-3901 | REVISION DATE | 1/21/2011 |
|---|---|---|---|---|---|

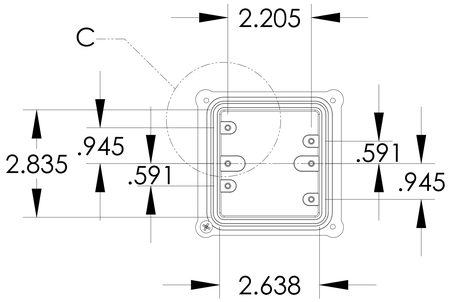


INSIDE BODY DETAILS

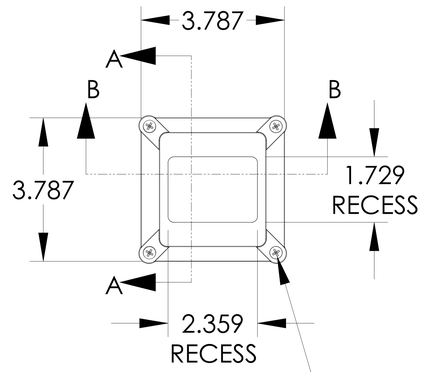


TOP VIEW

FOUR (4) M4x0.7 PITCH x 20mm (.787") LG.
STAINLESS STEEL CAPTIVE SCREWS

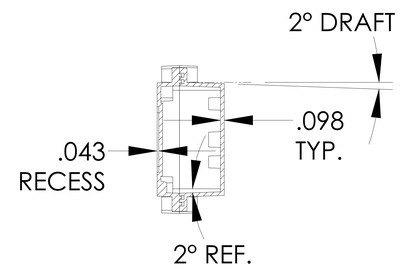


SECTION A-A

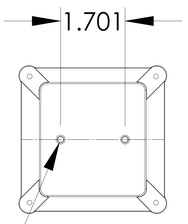


BOTTOM VIEW

∅.175 x .315 DEEP BLIND HOLE (2x)
{ACCEPTS M5 x 10mm (.394") LG.
SELF-TAPPING SCREWS (NOT SUPPLIED)}

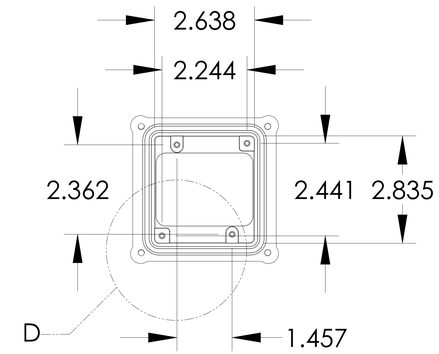


INSIDE COVER DETAILS

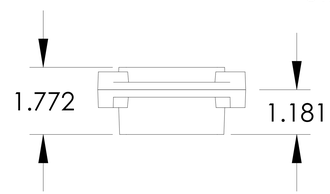


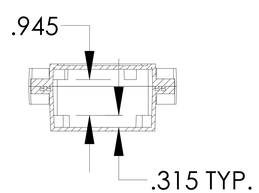


SECTION B-B

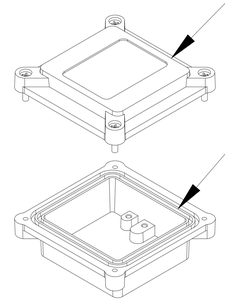


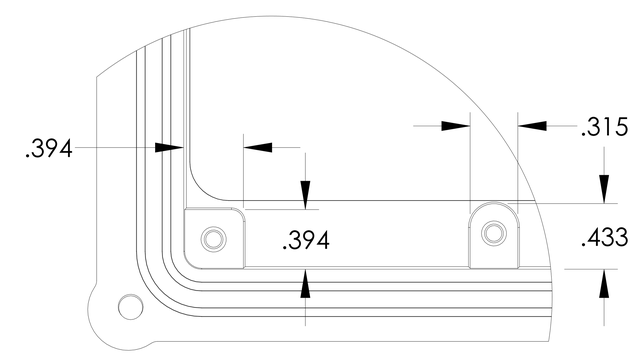


DETAIL D
SCALE 4 : 1

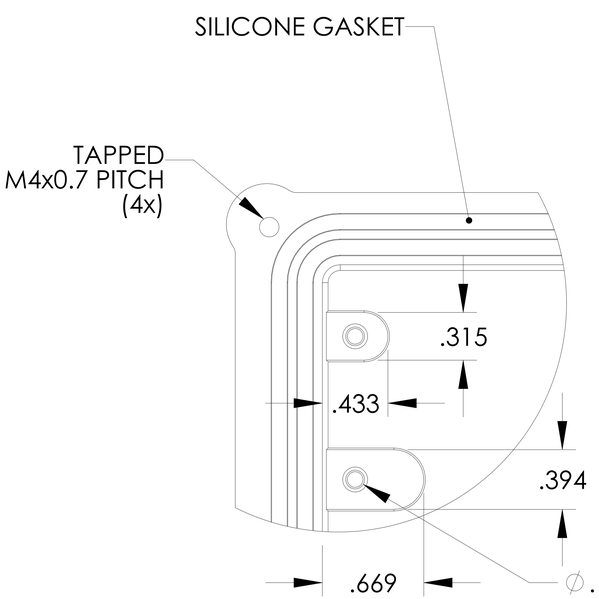


DETAIL C
SCALE 4 : 1

∅.125 x .315 DEEP BLIND HOLE
(6x) IN BODY
(4x) IN COVER
{ACCEPTS M3.5 x 6mm (.236") LG.
SELF-TAPPING SCREWS (NOT SUPPLIED)}

MEETS NEMA 1, 2, 4, 4X, 12, 13 AND IP67 RATINGS

MATERIAL - ALUMINUM ALLOY ADC-12

FINISH - NATURAL

TOLERANCES: ALL HOLE DIAMETERS ±.005
ALL OTHER DIMENSIONS ±.015