DRAWING MADE IN THIRD ANGLE PROJECTION

680383 680383

/home/us016926/DMTECmod

PART NUMBER	REV	FIRST USED
680383-1	D	122500-1
680383-2	D	565435-5
680383-3	D	354500-1

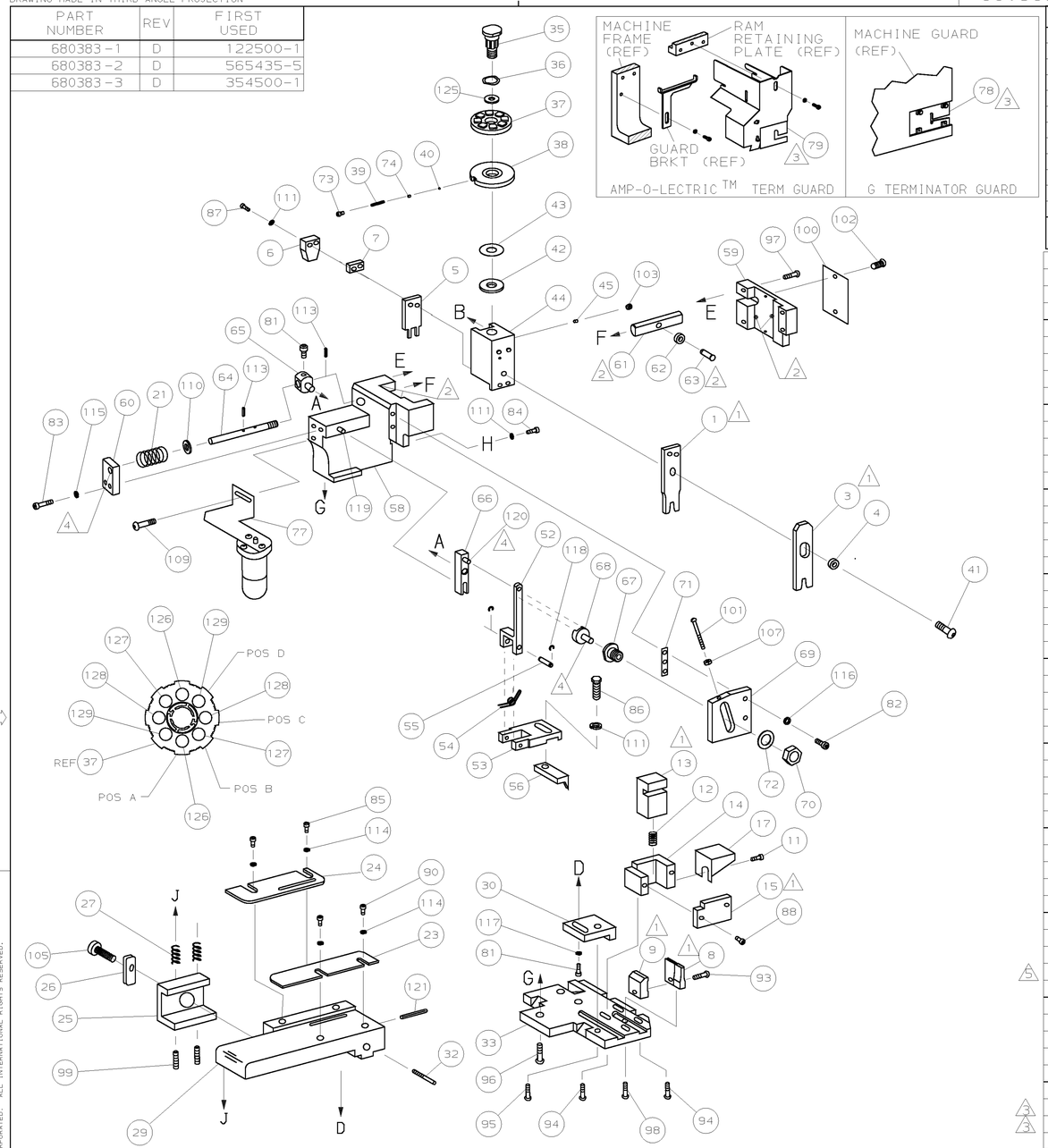

TERMINAL NAME: CONTACT, VARILOCK

AMP	MFG P/N
286531	80-8017-03-23

CRIMPING DATA

PAD LTR	CRIMP HEIGHT	WIRE SIZE
A	.064 ±.002 [1.63 ±0.05mm]	18
B	.060 ±.002 [1.52 ±0.05mm]	20
C	.058 ±.002 [1.47 ±0.02mm]	22
D	.056 ±.002 [1.42 ±0.05mm]	24 OR 26

CRIMP	SIZE	TYPE	RANGE
WIRE	.100 [2.54mm]	F	26-18
INSUL	.110 [2.794mm]	O	.070 MAX

WIRE STRIP LENGTH	TERM APPL SPEC	FEED	APPL INSTRUCTION	SET UP GAGE	LAYOUT
–	NONE	.335	408-8040	458637-1	L1840

	-3	-2	-1	U/M	DWG SIZE	PART NO	DESCRIPTION	ITEM NO
	2	2	2	–	C	1-354779-0	PIN, WIRE DISC (.3040)D	129
	2	2	2	–	C	354779-6	PIN, WIRE DISC (.3020)C	128
	2	2	2	–	C	354779-2	PIN, WIRE DISC (.3000)B	127
	2	2	2	–	C	9-354778-3	PIN, WIRE DISC (.2960)A	126
	1	1	1	–	A	986950-1	WASHER, FLAT PRECISION	125
	1	1	1	–	A	217238-1	GENERAL INSTRUCTION PACKAGE	124
	1	1	1	–	–	4088040	SF APPL INST 408-8040	123
								122
	1	1	1	–	A	4-21028-0	PIN,SLT SPR(ø.093x.75)ST GDE PL	121
	1	1	1	–	A	1-21030-1	PIN,DOWEL(ø.187x.50)LEVER	120
	1	1	1	–	A	1-21030-6	PIN,DOWEL(ø.187x1.25)HOUSING	119
	2	2	2	–	A	21045-3	RING,RET "C"(ø.187)FD FING PIN	118
	1	1	1	–	A	21024-5	WASHER, LOCK(#10)ADJ BLOCK	117
	2	2	2	–	A	21024-5	WASHER, LOCK(#10)ADJ PLATE	116
	2	2	2	–	A	21024-5	WASHER, LOCK(#10)FEED GDE ROD	115
	4	4	4	–	A	21024-2	WASHER,LOCK(#4)FRONT STP GUIDE	114
	2	2	2	–	A	5-21028-1	PIN,SLT SPR(ø.125x.50)ADJ ROD	113
								112
	4	4	4	–	A	21024-4	WASHER,LOCK(#8)STRIPPER	111
	1	1	1	–	A	21899-4	WASHER,FLAT(ø5/16)SCREW ADJ	110
	–	1	–	–	A	2-21002-6	SCR,BHC(10-32x.38)LUBE ASSY	109
								108
	1	1	1	–	A	21018-5	NUT,HEX(6-32)FEED ADJ	107
								106
	1	1	1	–	A	22353-8	SCR,SHLD(ø.187x.25)DRAG LEVER	105
	1	1	–	–	A	992031-1	PIN, CLEVIS	104
	1	1	1	–	A	21009-2	SCR,SKT SET(1/4-20x.25 LW)RAM	103
	2	2	2	–	A	21017-2	SCR,DRIVE(#2x.19)ID PLATE	102
	1	1	1	–	A	6-23715-5	SCR,PAN HD(6-32x1.50)FEED ADJ	101
	1	1	1	–	B	461264-1	PLATE, IDENTIFICATION	100
	2	2	2	–	A	5-21006-6	SCR,SET(10-32x.75)DRAG	99
	1	1	1	–	A	22733-8	SCR,BHC(8-32x.38 LW)ANVIL	98
	2	2	2	–	A	2-21002-9	SCR,BHC(10-32x.75)CAP	97
	3	3	3	–	A	2-22733-8	SCR,BHC(1/4-20x.62)HOUSING	96
	1	1	1	–	A	2-21002-7	SCR,BHC(10-32x.50)SG ADJ BLOCK	95
	4	4	4	–	A	2-21002-2	SCR,BHC(8-32x.50)TERM H DWN	94
	1	1	1	–	A	1-21000-9	SCR,BHC(8-32X.38)SHEAR	93
								92
	1	1	1	–	A	1-21002-7	SCR,BHC(6-32x.38)CAM	91
	2	2	2	–	A	1-21000-4	SCR,SHC(4-40X.38)F STR GDE	90
	1	1	–	–	A	7-21000-9	SCR,SHC(4-40x.19)STRIPPER	89
	2	2	2	–	A	1-21003-9	SCR,FL HD(6-32X.25)R SH PLATE	88
5	2	2	2	–	A	8-21002-9	SCR,SHC(8-32x1.00)DEP-HOLD	87
	1	1	1	–	A	2-22603-0	SCR,HEX HD(8-32x.31)FEED FINGER	86
	2	2	2	–	A	1-21000-3	SCR,SHC(4-40x.25)F ST GUIDE	85
	1	1	1	–	A	2-21000-7	SCR,SHC(8-32x.50)STRIPPER	84
	2	2	2	–	A	3-21000-7	SCR,SHC(10-32x.75)FEED ROD GD	83
	2	2	2	–	A	3-21000-6	SCR,SHC(10-32x.62)FEED ADJ BLK	82
	1	1	1	–	A	3-21000-4	SCR,SHC(10-32x.38)SG ADJ BL	81
	1	1	1	–	A	3-21000-4	SCR,SHC(10-32X.38)PIVOT BLK	80
3	–	REF	–	–	B	455749-1	GUARD, WINDOW	79
3	REF	–	–	–	B	679532-1	INSERT, GUARD	78
	–	1	–	–	C	1-465184-0	LUBRICATOR ASSY	77
								76
								75
	1	1	1	–	A	690603-1	SPRING, ASSIST	74
	1	1	1	–	A	23030-1	SCR,SHC(6-32x.25 SL)INS DISC	73
	1	1	1	–	A	458109-1	WASHER, SPECIAL	72
	1	1	1	–	A	690517-1	SPACER	71

QTY REQD PER ASSY — PARTS LIST

	-1	-2	-3	U/M	DWG SIZE	PART NO	DESCRIPTION	ITEM NO
	LEADMAKER			MECH POST FEED				
	BENCH MODEL K			MECH PRE FEED				
	BENCH MODEL G			MECH PRE FEED				
	1	1	1	–	B	22594-8	NUT,HEX(1/2-20)	70
	1	1	1	–	B	240628-1	PLATE, ADJUSTMENT	69
	1	1	1	–	B	240626-1	SHAFT, PIVOT	68
	1	1	1	–	B	240633-1	BUSHING	67
	1	1	1	–	A	455680-1	LEVER, INTERMEDIATE	66
	1	1	1	–	B	240629-1	BLOCK, PIVOT	65
	1	1	1	–	A	240632-2	SCREW, ADJ FEED ROD	64
	1	1	1	–	B	240659-3	PIN, CAM ROLLER	63
	1	1	1	–	B	240658-1	ROLLER, CAM	62
	1	1	1	–	B	454398-2	ROD, FEED	61
	1	1	1	–	A	454178-1	GUIDE, FEED ROD	60
	1	1	1	–	C	454220-1	CAP, RAM	59
	1	1	1	–	D	454485-1	HOUSING	58
								57
	1	1	1	–	B	694433-2	PAWL, FEED	56
	1	1	1	–	B	240624-1	PIN, FEED FINGER	55
	1	1	1	–	B	691499-1	SPRING, FEED FINGER	54
	1	1	1	–	A	690541-1	HOLDER, FEED FINGER	53
	1	1	1	–	B	455679-1	LEVER, TERMINAL FEED ARM	52
								51
								50
	1	–	–	–	B	690602-6	CAM, PRE-FEED 1 5/8 ST	49
	–	1	–	–	B	690602-5	CAM, PRE-FEED 1 1/8 ST	48
	–	–	1	–	B	690501-4	CAM, POST-FEED 1 5/8 ST	47
								46
	1	1	1	–	A	690191-1	PLUG, NYLON	45
	1	1	1	–	C	455673-1	RAM	44
	1	1	1	–	A	690125-1	WASHER, LAMINATED	43
	1	1	1	–	A	690124-1	WASHER, RAM	42
	1	1	1	–	A	7-21002-9	BOLT, CRIMPER(5/16x1.00)	41
	1	1	1	–	A	23241-6	BALL, STEEL	40
	1	1	1	–	A	690170-1	SPRING, COMPRESSION	39
	1	1	1	–	C	690142-1	DISC, INSULATION	38
	1	1	1	–	D	354777-1	WIRE DISC, PLASTIC	37
	1	1	1	–	A	22480-5	WASHER, SPRING	36
	1	1	1	–	B	690212-1	POST, RAM	35
								34
	1	1	1	–	D	1-455675-1	PLATE, BASE	33
	1	1	1	–	A	690432-3	SCREW, ADJUSTMENT	32
								31
	1	1	1	–	B	455689-1	BLOCK, STRIP GUIDE ADJ	30
	1	1	1	–	C	1-844048-2	PLATE, STRIP GUIDE	29
								28
	2	2	2	–	A	1-22284-0	SPRING, DRAG	27
	1	1	1	–	B	240793-1	LEVER, DRAG RELEASE	26
	1	1	1	–	B	240792-5	DRAG, TERMINAL	25
	1	1	1	–	D	690438-1	GUIDE, STRIP (REAR)	24
	1	1	1	–	A	189124-5	GUIDE, STRIP (FRONT)	23
	–	–	1	–	B	690472-2	STRIPPER	22
	1	1	1	–	A	4-22284-9	SPRING, FEED RETURN	21
	1	1	–	–	A	679218-1	STRIPPER WIRE STOP ASSY	20
	1	1	–	–	B	458949-1	STRIPPER	19
								18
	1	1	1	–	A	691668-1	GUARD, CHIP (REAR)	17
								16
1	1	1	1	–	B	904234-1	PLATE, SHEAR (REAR)	15
	1	1	1	–	B	904235-1	HOLDER, SHEAR (REAR)	14
1	1	1	1	–	C	690463-1	SHEAR, FLOAT (REAR)	13
	1	1	1	–	A	5-22280-0	SPRING, SHEAR	12
	1	1	1	–	B	690461-1	STOP, SHEAR	11
								10
1	1	1	1	–	C	662688-1	PLATE, SHEAR	9
1	1	1	1	–	C	662659-1	ANVIL	8
	1	1	1	–	C	6-240641-8	SPACER, DEPRESSOR (REAR)	7
	1	1	1	–	A	690468-7	DEPRESSOR, SHEAR (REAR)	6
	1	1	1	–	C	662653-1	BLADE, SLUG	5
	1	1	1	–	B	238009-1	SPACER, BLOCK CRIMPER	4
1	1	1	1	–	C	456135-7	CRIMPER, INSULATION	3
								2
1	1	1	1	–	C	2-456407-3	CRIMPER, WIRE	1

REVISION OF EACH ASSY NO (WHEN BLANK, USE DWG REVISION)

QTY REQD PER ASSY — PARTS LIST

1. RECOMMENDED SPARE PARTS.
2. GREASE LIGHTLY.
3. GUARD MUST BE IN PLACE WHEN OPERATING APPLICATOR IN A BENCH MACHINE.
4. LUBRICATE DAILY USING NO. 20 MACHINE OIL.
5. CUT TO LENGTH AT ASSEMBLY.

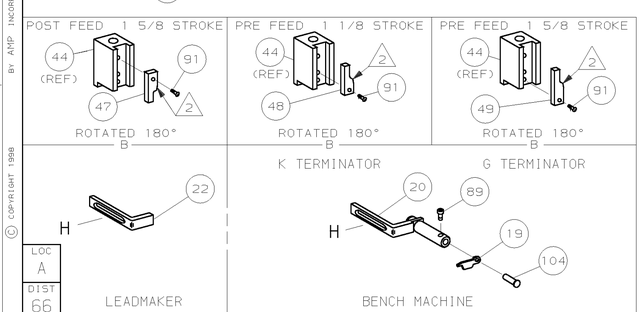

LOC	DIST
A	66

P	F	LTR	REVISION RECORD	APP	DATE
		D1	ECN 0150-0429-04	TE	4-04
		D	ECN 0150-0849-01	TE	10-01
		C	0150-8355-98	TB	3-98
		B	0150-8153-97	CE	12-97

DIMENSIONS IN INCHES. DO NOT SCALE PRINT.
TOLERANCES UNLESS OTHERWISE SPECIFIED:
2 PLC DEC ±-
3 PLC DEC ±-
4 PLC DEC ±-
ANGLES ± -
SURF TEXTURE: √
REMOVE BURRS, BREAK SHARP EDGES R.015 MAX

MATL – HT TR – FIN –

DR D.SALTZER 12-4-97 APP J.DODDS 12-4-97
CHK C.ERISMAN 12-4-97 REL B. MORGAN 12/15/97

AMP Incorporated Harrisburg, PA 17105-3608

NAME SIDE FEED HDM APPLICATOR MACHINE REF MINI APPL

SCALE – SIZE D DWG NO 680383 SHEET 1 of 1 REV D1

CAGE CODE 00779 CUSTOMER AND ASSEMBLY DRAWING RESTRICTED TO –

THIS DRAWING IS UNPUBLISHED. © COPYRIGHT 1998 BY AMP INCORPORATED. ALL INTERNATIONAL RIGHTS RESERVED.
RELEASED FOR PUBLICATION MAR11,1998
THIS DRAWING IS A CONTROLLED DOCUMENT

AMP 1756 REV 3-92 05-APR-04 13:02:45 us016926