THIS COPY IS PROVIDED ON A RESTRICTED BASIS AND IS NOT TO BE USED IN ANY WAY DETRIMENTAL TO THE INTERESTS OF PANDUIT CORP.

PANDUIT P/N	WEIGHT
RFX103-X	.097 LB/10 PCS. (44.0 G/10 PCS.)

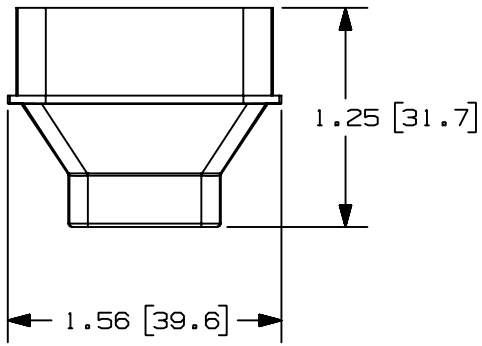

NOTES:
1. SEE CURRENT CATALOG FOR ADDITIONAL PART SUFFIXES TO INDICATE COLOR AND OR PACKAGE QUANTITY.
2. FOR USE IN POWER CABLING APPLICATIONS UP TO 600V OR FOR CATEGORY 5, FIBER OPTIC AND OTHER LOW VOLTAGE APPLICATIONS REQUIRING TAMPER-RESISTANCE.
3. REDUCER FITTING IS USED TO REDUCE PANDUIT'S LD10 PROFILE FITTINGS TO PANDUIT'S LD3 PROFILE RACEWAYS.
4. DIMENSIONS IN PARENTHESIS ARE IN METRIC.

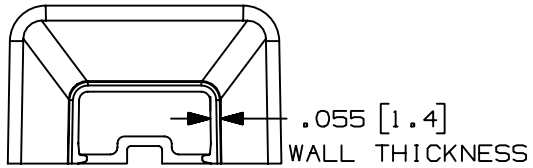

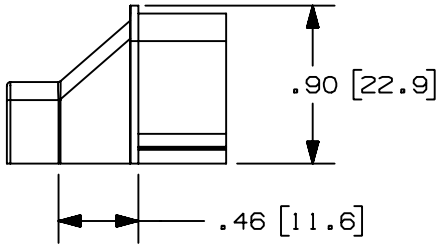

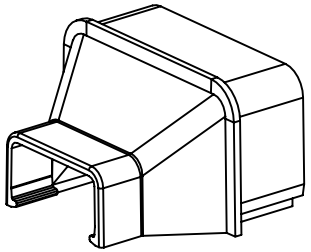

REV	DATE	BY	CHK	DESCRIPTION	ECN - R		CUST	SUP
1	08-11-97	RABO	HIW	A. INCORRECT DRAWING NUMBER WAS CHANGED FROM 35541-53 TO 35541-69	35541-69	HIW	HIW	
R	07-23-97	RABO	HIW	RELEASED TO PRODUCTION	35541-53	HIW	HIW	

CAD FILENAME/LAYERS: D35541DA_RFX103_C_00A.PRT

PANDUIT CORP. TINLEY PARK, ILLINOIS

REDUCER FITTING (RFX103-X)

CUSTOMER DRAWING

UNLESS OTHERWISE SPECIFIED, DIMENSIONAL TOLERANCES ARE:
(.X) ± (.XXX) ±.005(.3)
(.XX) ±.010(.8) ANGLES ±

UNLESS OTHERWISE SPECIFIED, ALL DIMENSIONS ARE GIVEN IN INCHES, THIRD ANGLE PROJECTION.

DRAWN BY: RABO
DATE: 07-23-97
CHK'D: HIW
MAT'L: ABS/PC
SCALE: FULL
DRAWING NO.: 35541-69
DWG SIZE: A