CUSTOMER TERMINAL	RoHS	LEAD(Pb)-FREE
Sn100%	Yes	Yes

compliant RoHS WE-MIDCOM

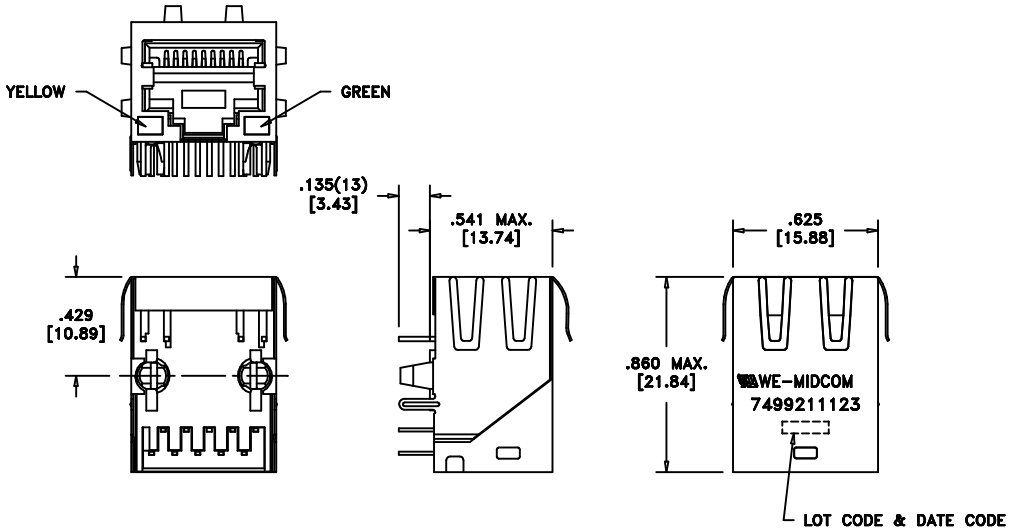

ELECTRICAL SPECIFICATIONS @ 25°C unless otherwise noted:

PARAMETER		TEST CONDITIONS	VALUE
INDUCTANCE	J1-J2	100kHz, 100mVAC, 8mADC, Lp	350uH min.
INDUCTANCE	J3-J6	100kHz, 100mVAC, 8mADC, Lp	350uH min.
DIELECTRIC	P1-J1	-	1500Vrms, 1 minute
TURNS RATIO		(P1-P2):(J1-J2)	1:1, ±2%
TURNS RATIO		(P4-P5):(J3-J6)	1:1, ±2%
INSERTION LOSS		1M - 100MHz	-1.0dB max.
RETURN LOSS		1M - 30MHz	-18dB min.
RETURN LOSS		30M - 45MHz	-16dB min.
RETURN LOSS		45M - 60MHz	-14dB min.
RETURN LOSS		60M - 80MHz	-12dB min.
CROSSTALK		1M - 100MHz	-35dB min.
COMMON MODE REJECTION		1M - 100MHz	-35dB min.
COMMON MODE REJECTION		100M - 500MHz	-25dB min.

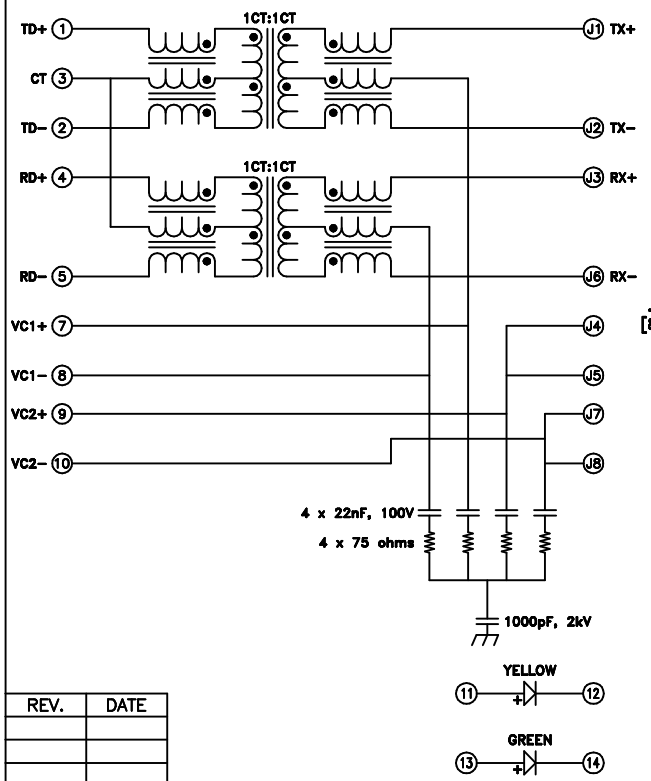

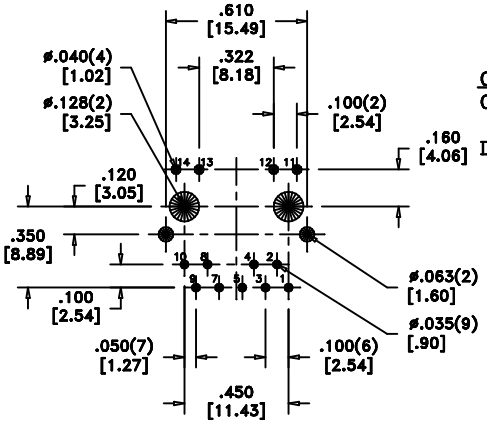

RECOMMENDED
P.C. PATTERN, COMPONENT SIDE

GENERAL SPECIFICATIONS:

OPERATING TEMPERATURE RANGE: 0°C to +70°C.

Designed to handle 350mADC and meet 802.3af.

REV.	DATE
6A	8/08

AGENCY NUMBER	
UL60950-1	E205930

Packaging Specifications

Method: Tube
PKG-0524
www.midcom-inc.com

Unless otherwise specified:
Tolerances: Fractions: ±1/64
Angles: ±1° Decimals: ±.010[.25]

This drawing is dual dimensioned. Dimensions in brackets are in millimeters.

DRAWING TITLE
TRANSFORMER
10/100Mbs & PoE
eiSos p/n: 7499211123

Midcom-WE
www.midcom-inc.com

REVISIONS: SEE SHEET 1

DRAWING NO.
7499211123

SCALE ---