DRAWING MADE IN THIRD ANGLE PROJECTION

680130 ⇔ 680130

<US161B>DEPTPROJB>U.1618>U.FTB

PART NUMBER	REV	FIRST USED
680130-1	A	854400-1
680130-2	A	565435-5
680130-3	A	354500-1

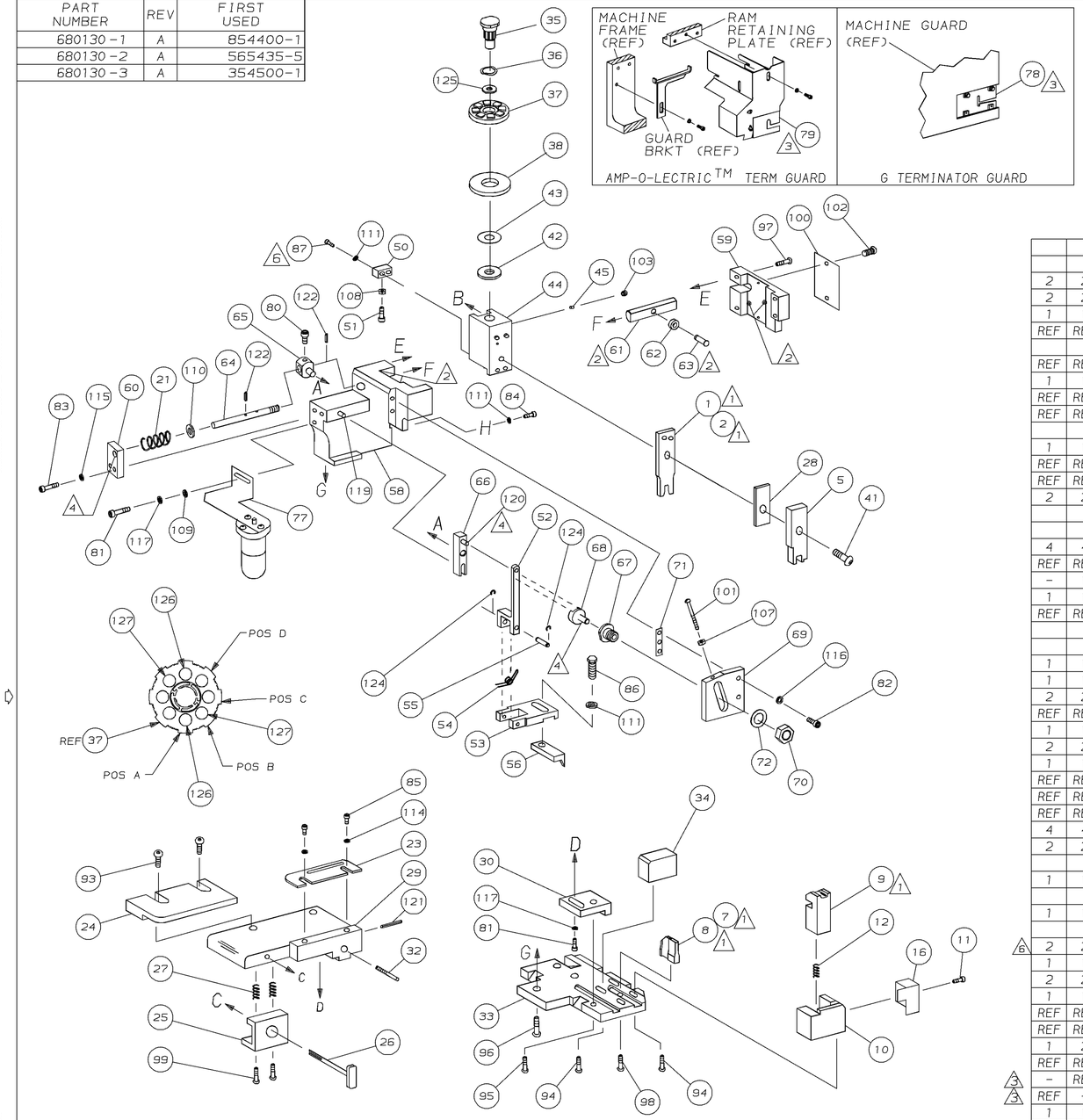

TERMINAL NAME: BLADE CONTACT	
8	94-4813-87-1
7	94-4813-10-1

TERM APPL SPEC 114-02068

CRIMPING DATA				
PAD LTR	CRIMP HEIGHT		WIRE SIZE	
A	.041 ±.002		20	8
B	.028 ±.002		30	7
C	NOT		USED	
D	NOT		USED	
CRIMP	SIZE	TYPE	RANGE	
WIRE	.070	F	20	8
WIRE	.055	F	30	7
FEED	APPL INST		SET UP GAGE	LAYOUT
.216	408-8040		458637-1	L1608
WIRE STRIP LENGTH			-	

-3	-2	-1	U/M	DWG SIZE	PART NO	DESCRIPTION	ITEM NO
							129
							128
2	2	2	-	C	3-354778-3	PIN, WIRE DISC (.2660)B	127
2	2	2	-	C	354778-5	PIN, WIRE DISC (.2520)A	126
1	1	1	-	A	986950-1	WASHER, FLAT PRECISION	125
REF	REF	REF	-	A	21045-3	RING,RET "C"(ø.187)FD FING PIN	124
							123
REF	REF	REF	-	A	5-21028-1	PIN,SLT SPR(ø.125x.50)ADJ ROD	122
1	1	1	-	A	4-21028-0	PIN,SLT SPR(ø.093x.75)ST GDE PL	121
REF	REF	REF	-	A	1-21030-1	PIN,DOWEL(ø.187x.50)LEVER	120
REF	REF	REF	-	A	1-21030-6	PIN,DOWEL(ø.187x1.25)HOUSING	119
							118
1	1	1	-	A	21024-5	WASHER, LOCK(#10)ADJ BLOCK	117
REF	REF	REF	-	A	21024-5	WASHER,LOCK(#10)ADJ PLATE	116
REF	REF	REF	-	A	21024-5	WASHER,LOCK(#10)FEED GDE ROD	115
2	2	2	-	A	21024-2	WASHER,LOCK(#4)FRONT STP GUIDE	114
							113
							112
4	4	4	-	A	21024-4	WASHER,LOCK(#8)STRIPPER	111
REF	REF	REF	-	A	21899-4	WASHER,FLAT(ø5/16)SCREW ADJ	110
-	1	-	-	A	21899-2	WASHER,FLAT(NO.10)LUB ASSY	109
1	1	1	-	A	21018-5	NUT,HEX(NO.6)HOLDDOWN	108
REF	REF	REF	-	A	21018-5	NUT,HEX(6-32)FEED ADJ	107
							106
							105
1	1	-	-	A	992031-1	PIN, CLEVIS	104
1	1	1	-	A	21009-2	SCR,SKT SET(1/4-20x.25 LW)RAM	103
2	2	2	-	A	21017-2	SCR,DRIVE(#2x.19)ID PLATE	102
REF	REF	REF	-	A	6-23715-5	SCR,PAN HD(6-32x1.50)FEED ADJ	101
1	1	1	-	B	461264-1	PLATE, IDENTIFICATION	100
2	2	2	-	A	3-21002-0	SCR,BHC(10-32x.88)DRAG	99
1	1	1	-	A	22733-8	SCR,BHC(8-32x.38 LW)ANVIL	98
REF	REF	REF	-	A	2-21002-9	SCR,BHC(10-32x.75)CAP	97
REF	REF	REF	-	A	2-22733-8	SCR,BHC(1/4-20x.62)HOUSING	96
REF	REF	REF	-	A	2-21002-7	SCR,BHC(10-32x.50)SG ADJ BLOCK	95
4	4	4	-	A	2-21002-2	SCR,BHC(8-32x.50)SHEAR	94
2	2	2	-	A	2-21002-1	SCR,BHC(8-32x.38)R STRIP GUIDE	93
							92
1	1	1	-	A	1-21002-7	SCR,BHC(6-32x.38)CAM	91
							90
1	1	-	-	A	7-21000-9	SCR,SHC(4-40x.19)STRIPPER	89
							88
2	2	2	-	A	2-21000-7	SCR,SHC(8-32x.48)HOLDDOWN	87
1	1	1	-	A	2-22603-0	SCR,HEX HD(8-32x.31)FEED FINGER	86
2	2	2	-	A	1-21000-3	SCR,SHC(4-40x.25)F ST GUIDE	85
1	1	1	-	A	2-21000-7	SCR,SHC(8-32x.50)STRIPPER	84
REF	REF	REF	-	A	3-21000-7	SCR,SHC(10-32x.75)FEED ROD GD	83
REF	REF	REF	-	A	3-21000-6	SCR,SHC(10-32x.62)FD ADJ BLK	82
1	2	1	-	A	3-21000-4	SCR,SHC(10-32x.38)SG ADJ BL	81
REF	REF	REF	-	A	3-21000-4	SCR,SHC(10-32x.38)PIVOT BLK	80
-	REF	-	-	B	455749-1	GUARD, WINDOW	79
REF	-	-	-	B	679532-1	INSERT, GUARD	78
1	1	1	-	C	1-465184-0	LUBRICATOR ASSY	77
							76
							75
							74
							73
REF	REF	REF	-	A	458109-1	WASHER, SPECIAL	72
REF	REF	REF	-	A	690517-1	SPACER	71

QTY REQD PER ASSY — REVISION OF EACH ASSY NO (WHEN BLANK, USE DWG REVISION) — PARTS LIST

-1	-2	-3						
LEADMAKER	BENCH MODEL K	BENCH MODEL G			MECH POST FEED			
					MECH PRE FEED			
					MECH PRE FEED			
REF	REF	REF	-	B	22594-8	NUT,HEX(1/2-20)	70	
REF	REF	REF	-	B	240628-1	PLATE, ADJUSTMENT	69	
REF	REF	REF	-	B	240626-1	SHAFT, PIVOT	68	
REF	REF	REF	-	B	240633-1	BUSHING	67	
REF	REF	REF	-	A	455680-1	LEVER, INTERMEDIATE	66	
REF	REF	REF	-	B	240629-1	BLOCK, PIVOT	65	D
REF	REF	REF	-	A	240632-2	SCREW, ADJ FEED ROD	64	
REF	REF	REF	-	B	240659-3	PIN, CAM ROLLER	63	
REF	REF	REF	-	B	240658-1	ROLLER, CAM	62	
REF	REF	REF	-	B	454398-2	ROD, FEED	61	
REF	REF	REF	-	A	454178-1	GUIDE, FEED ROD	60	
REF	REF	REF	-	C	454220-1	CAP, RAM	59	
REF	REF	REF	-	D	454485-1	HOUSING	58	
							57	
1	1	1	-	B	690542-2	PAWL, FEED	56	
REF	REF	REF	-	B	240624-1	PIN, FEED FINGER	55	
REF	REF	REF	-	B	691499-1	SPRING, FEED FINGER	54	
REF	REF	REF	-	B	690541-1	HOLDER, FEED FINGER	53	
REF	REF	REF	-	A	455679-1	LEVER, TERMINAL FEED ARM	52	
1	1	1	-	A	811242-2	BUMPER, HOLDDOWN	51	
1	1	1	-	A	690753-1	SPACER, TONKER	50	
1	-	-	-	B	690602-6	CAM, PRE-FEED 1 5/8 ST	49	
-	1	-	-	B	690602-5	CAM, PRE-FEED 1 1/8 ST	48	
-	-	1	-	B	690501-4	CAM, POST-FEED 1 5/8 ST	47	
1	1	1	-	B	459456-1	APPLICATOR, BASIC (SUBASSY)	46	
1	1	1	-	A	690191-1	PLUG, NYLON	45	
1	1	1	-	C	455673-1	RAM	44	
1	1	1	-	A	690125-1	WASHER, LAMINATED	43	C
1	1	1	-	A	690124-1	WASHER, RAM	42	
1	1	1	-	A	7-21002-9	BOLT, CRIMPER(5/16x1.00)	41	
							40	
							39	
1	1	1	-	A	690223-2	SPACER, INSULATION DISC	38	
1	1	1	-	D	354777-1	WIRE DISC, PLASTIC	37	
1	1	1	-	A	22480-5	WASHER, SPRING	36	
1	1	1	-	B	690212-1	POST, RAM	35	
1	1	1	-	B	690786-1	SUPPORT, TERMINAL	34	
REF	REF	REF	-	D	455675-1	PLATE, BASE	33	
1	1	1	-	A	690432-3	SCREW, ADJUSTMENT	32	
							31	
REF	REF	REF	-	B	455689-1	BLOCK, STRIP GUIDE ADJ	30	
1	1	1	-	C	455671-1	PLATE, STRIP GUIDE	29	
1	1	1	-	C	1-455888-1	SPACER, FRONT SHEAR DEP	28	
2	2	2	-	A	1-22284-0	SPRING, DRAG	27	
1	1	1	-	B	690546-1	LEVER, DRAG RELEASE	26	
1	1	1	-	B	240792-1	DRAG, TERMINAL	25	
1	1	1	-	D	7-690504-5	GUIDE, STRIP (REAR)	24	
1	1	1	-	A	690438-1	GUIDE, STRIP (FRONT)	23	
-	-	1	-	B	690472-2	STRIPPER	22	
REF	REF	REF	-	A	4-22284-9	SPRING, FEED RETURN	21	B
1	1	-	-	A	679218-1	STRIPPER WIRE STOP ASSY	20	
1	1	-	-	B	458949-1	STRIPPER	19	
							18	
							17	
1	1	1	-	B	691667-1	GUARD, CHIP (FRONT)	16	
							15	
							14	
							13	
1	1	1	-	A	5-22280-0	SPRING, SHEAR	12	
1	1	1	-	B	690461-1	STOP, SHEAR	11	
1	1	1	-	C	690459-1	HOLDER, SHEAR (FRONT)	10	
1	1	1	-	C	462006-1	SHEAR, FLOAT (FRONT)	9	
1	1	1	-	C	1-805887-0	ANVIL	8	
-	-	-	-	C	1-805887-1	ANVIL	7	
							6	
1	1	1	-	C	2-455889-0	DEPRESSOR, SHEAR (FRONT)	5	
							4	
							3	
-	-	-	-	C	2-456402-5	CRIMPER, WIRE	2	
1	1	1	-	C	2-456404-2	CRIMPER, WIRE	1	

-3 -2 -1 U/M DWG SIZE PART NO DESCRIPTION ITEM NO — REVISION OF EACH ASSY NO (WHEN BLANK, USE DWG REVISION) — QTY REQD PER ASSY — PARTS LIST

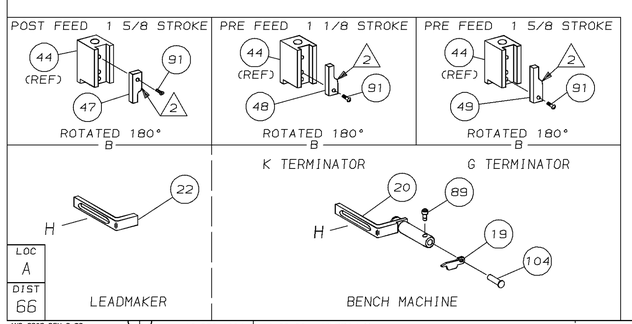

1. RECOMMENDED SPARE PARTS.
2. GREASE LIGHTLY.
3. GUARD MUST BE IN PLACE WHEN OPERATING APPLICATOR IN A BENCH MACHINE.
4. LUBRICATE DAILY USING NO. 20 MACHINE OIL.
5. ITEMS WITH QTY OF REF SPECIFIED (EXCEPT ITEMS 78 AND 79) ARE USED ON ITEM 46.
6. CUT TO LENGTH AT ASSY.
7. ITEM 2 AND ITEM 7 TO BE USED WITH TERMINAL NO 94-4813-10-1 FOR 30 AWG, (.055 CW).
8. ITEM 1 AND ITEM 8 TO BE USED WITH TERMINAL NO 94-4813-87-1 FOR 20 AWG, (.070 CW).

P	F	LTR	REVISION RECORD	APP	DATE
		A	RELEASED	CE	11-94

DIMENSIONS IN INCHES. DO NOT SCALE PRINT. TOLERANCES UNLESS OTHERWISE SPECIFIED, 2 PLC DEC ±- 3 PLC DEC ±- 4 PLC DEC ±- ANGLES ±- SURF TEXTURE. √ REMOVE BURRS, BREAK SHARP EDGES R.015 MAX

MATL - HT TR - FIN -

DR 9/19/94 M. O'BRINE | APP 9-19-94 T. ELBIN | CHK 9-19-94 C. ERISMAN | REL 12/6/94 B. MORGAN

AMP Incorporated Harrisburg, PA 17105-3608

NAME SIDE FEED HDM APPLICATOR | MACHINE REF MINI APPL | SCALE - | D | DWG NO 680130 | SHEET 1 OF 1 | REV A

THIS DRAWING IS A CONTROLLED DOCUMENT FOR AMP INCORPORATED. IT IS SUBJECT TO CHANGE AND THE CONTROLLING ENGINEERING ORGANIZATION SHOULD BE CONTACTED FOR THE LATEST REVISION.

THIS INFORMATION IS CONFIDENTIAL AND IS DISCLOSED TO YOU ON CONDITION THAT NO FURTHER DISCLOSURE IS MADE BY YOU TO OTHER THAN AMP PERSONNEL WITHOUT WRITTEN AUTHORIZATION FROM AMP INCORPORATED, HARRISBURG, PA.