THIS DRAWING IS UNPUBLISHED. RELEASED FOR PUBLICATION 1997
© COPYRIGHT 1997 BY - ALL RIGHTS RESERVED.

REVISIONS

P	LTR	DESCRIPTION	DATE	DWN	APVD
	A8	REVISED PER ECR-16-016780	19SEP2017	NG	MKO
	A9	REVISED PER ECR-21-123577	21MAR2022	RK	JB

PN 0-1. 0-3 & 0-5

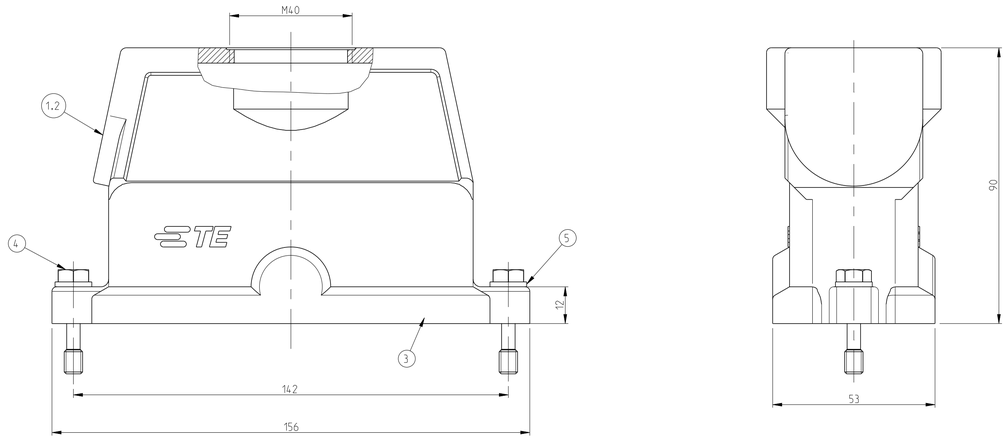

PN 0-2.0-4 & 0-7

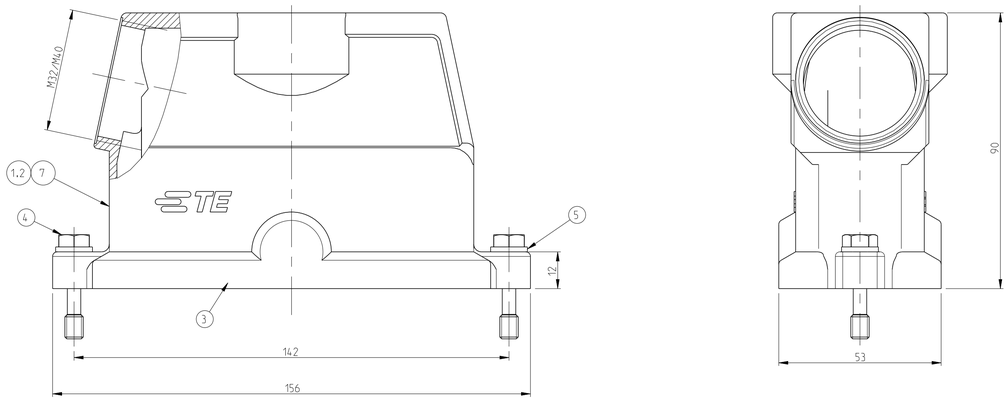

PN 0-6 & 0-8

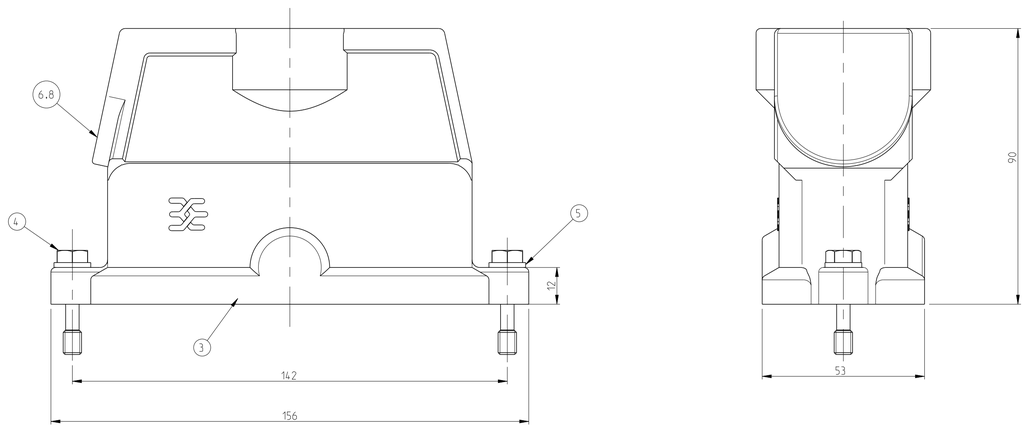

NOTES

1 Material: Housing: Aluminum diecasting alloy
seals: Neoprene

2 Surface:- Aluminium oxide + Varnisch Black
-Grey

3 Varnish on the inside not necessary

4 Special- Logo

5 Packaging quantity 5 pieces in a box

PN 0-1. 0-3 & 0-5

SCALE 1:2

PN 0-2.0-4 & 0-7

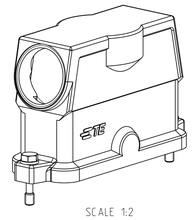

SCALE 1:2

PN 0-6 & 0-8

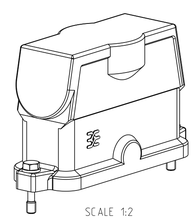

SCALE 1:2

OBSOLETE			OBSOLETE												
1										Hood HIP-K	Aluminium	Aluminium oxide	Blackl	8	Without logo/thread
	1									Hood HIP	Aluminium		Without varnish	7	
			1							Hood HIP-K	Aluminium	Aluminium oxide	Without varnish	6	Without M-Thread
2	2		2	2	2	2	2	2		Pane	Stainless steel	Blank		5	B6.4
2	2		2	2	2	2	2	2		Fixing screw	Stainless steel	Blank		4	M6x30
1	1		1	1	1	1	1	1		Seal	Neoprene		Black	3	
					1	1		1		Hood HIP-K	Aluminium	Aluminium oxide	Black	2	
						1			1	Hood HIP	Aluminium		Grey	1	
0-8	0-7	0-6		0-5	0-4	0-2		0-3	0-1	DESCRIPTION	MATERIAL	SURFACE	COLOR	ITEM NO	REMARKS
										ORDERING TEXT					
			△4							HIP.24/64.STO.1.M40.G					
								HIP.24/64.STO.1.M40.G							
							HIP.24/64.STS.1.M40.G								
						HIP-K.24/64.STS.1.M40.G									
					HIP-K.24/64.STS.1.M32.G										
				HIP-K.24/64.ST											
		HIP.24/64.STS.1.M40.G													

THIS DRAWING IS A CONTROLLED DOCUMENT.

DIMENSIONS: mm

TOLERANCES UNLESS OTHERWISE SPECIFIED:
± ISO 2768
± ISO 2768-mK
± ASME Y14.5-1994
0 PLC ±
1 PLC ±
2 PLC ±
3 PLC ±
4 PLC ±
ANGLES ±

MATERIAL

FINISH

DWN Schneider 10.09.02
CHK Schweiger 10.09.02
APVD

PRODUCT SPEC 108-74030
APPLICATION SPEC 114-74017
WEIGHT

TE Connectivity

NAME Hood HIP.24/64.1.M32/M40.G

SIZE	CAGE CODE	DRAWING NO	RESTRICTED TO
A1	00779	C-1106473	

CUSTOMER DRAWING | SCALE 1:1 | SHEET 1 OF 1 | REV A9

4805 (3/13)