NOTES:

Plunger: Brass, 20μ" MIN Au over, 50μ" MIN Ni over
Barrel : Brass, 3μ" ,MIN Au over, 50μ" MIN Ni over
Spring : Stainless Steel

Mechanical Characteristics:

Spring Force : 70g ± 20% at Working Length
Mechanical Life : 1,000,000 cycle

Electrical Characteristics:

Current Rating : 2A
Contact Resistance : 20 mΩ Max

Operating Temperature range : -55~125° C
Packing: PE Bag

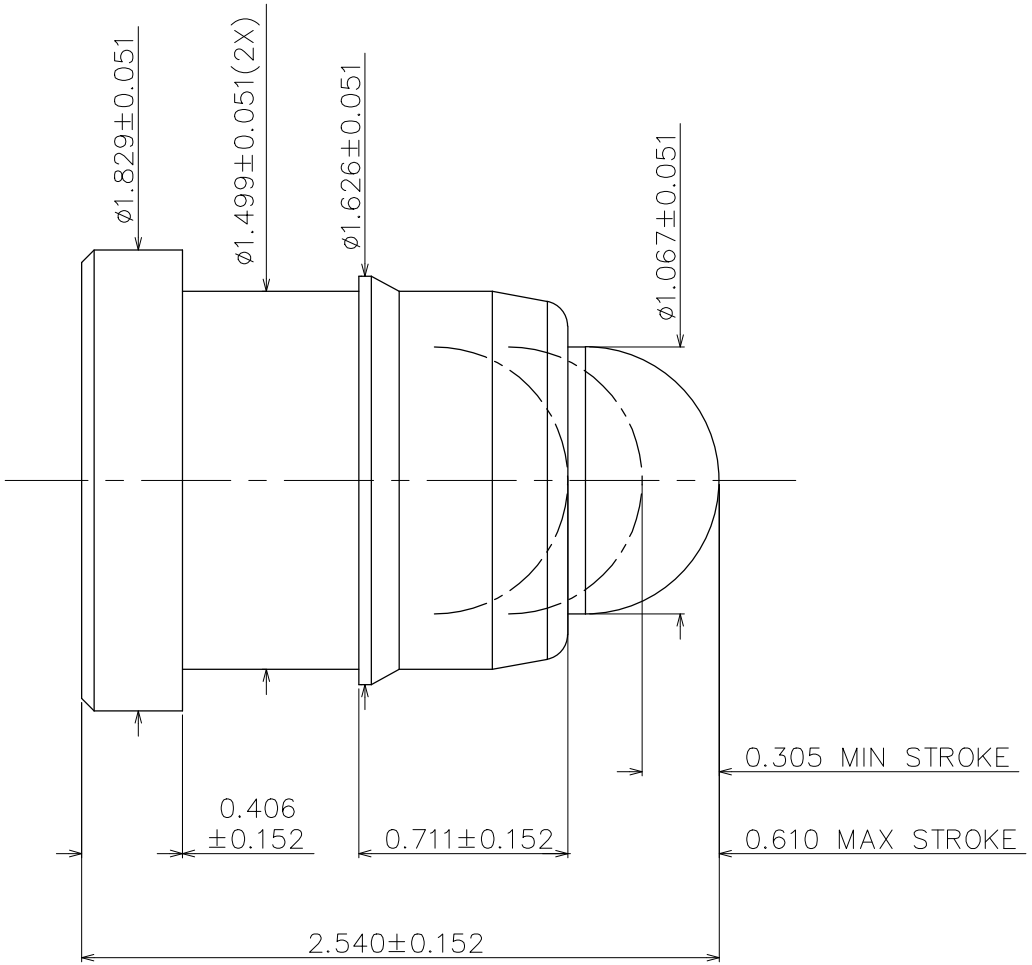

RoHS compliant
Unit: mm

Scale	Free					Date	Name	Customer-No.
TOLERANCE					Drawn	28.03.2018	Tom	
X.X	±0.20				Approved	28.03.2018	Winnie	ASSMANN WSW-No. A-CSL-S-020-B1
X.XX	±0.10							
X.XXX	±0.08							Drawing-No.
DIM	TOL							ASS 7898 CO rev00
Angle	±3°	0	Drawn	28.03.2018	Tom			
Angle	TOL	Id.	Modification	Date	Name			Replace / Sheet

ASSMANN WSW components

SV4444