NOTES:

1. MATERIALS AND FINISHES:
   BODY = BRASS PER ASTM-B16, GOLD PLATED PER MIL-G-45204 TYPE I, .000010 MIN THICK,
   OVER COPPER PER MIL-C-14550, CLASS 4, .000130 MIN THICK
   CONTACT PIN = PHOSPHOR BRONZE PER ASTM B139, GOLD PLATED PER MIL-G-45204, .000050 MIN THICK
   OVER NICKEL PLATE PER QQ-N-290 .000050 MIN THICK
   INSULATOR = PTFE PER MIL-P-19468

2. ELECTRICAL:
   A. IMPEDANCE: 50 OHM
   B. FREQUENCY RANGE: DC - 4 GHz
   C. VSWR(RETURN LOSS): 1.05 (32 dB), MAX. @2.2 GHz
   D. DIELECTRIC WITHSTANDING VOLTAGE: 1000 VRMS, MIN.

3. MECHANICAL:
   A. DURABILITY: 200 CYCLES MIN.
   B. TEMPERATURE RANGE: -65° C TO 165° C
   C. FORCE TO ENGAGE/DISENGAGE: TORQUE: 2.0 INCH POUNDS (MAX.)
   D. COUPLING PROOF TORQUE: 15 INCH POUNDS MIN.
   E. COUPLING MECHANISM RETENTION FORCE: 60 LBS. MIN
   F. CENTER CONTACT RETENTION: AXIAL: 6 LBS. MIN, RADIAL: 4 INCH OUNCES MIN.

4. PACKAGING:
   A. QUANTITY: BULK PACK 100 PER BAG
   B. MARKING: BAG TO BE MARKED
      "ANAREN 57837-0001"
      "AMPHENOL, 901-10112, AND DATE CODE"

901-10112	REVISIONS				
DRAWING NO.	REV	DESCRIPTION	DATE	ECO	APPR
THIRD ANGLE PROJ.	A	RELEASE TO MFG.	7/7/03	44545	CPM
	B	1) 3.30 WAS 2.92 2) BODY PLATING WAS 5 MICROINCHES GOLD 3) CENTER CONTACT WAS BERYLLIUM COPPER 4) ADDED CUSTOMER PN TO PACKAGING	9/24/03	44617	
	C	.380 WAS .375 ADD .080, .020 DIMENSIONS; ELECTRICAL, MECHANICAL, PACKAGING INFO; SPECS. TO MATERIAL AND FINISHES NOTES	9/2/05	45698	KJC

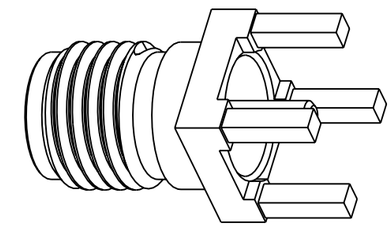

SCALE 4.000

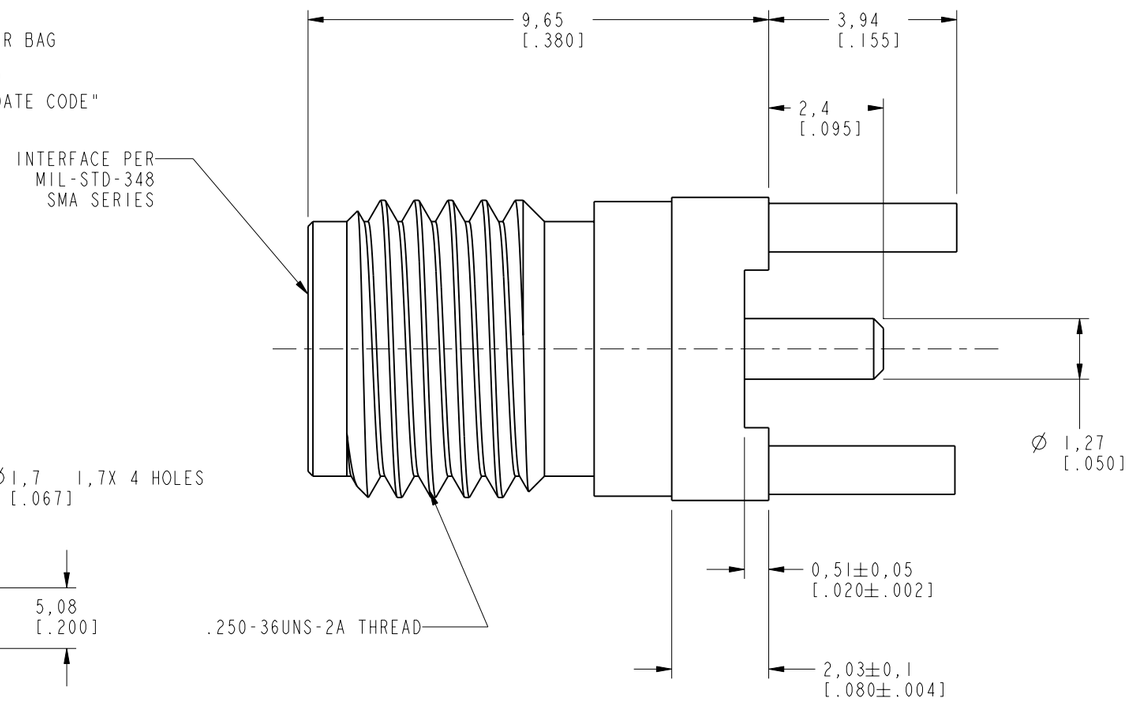

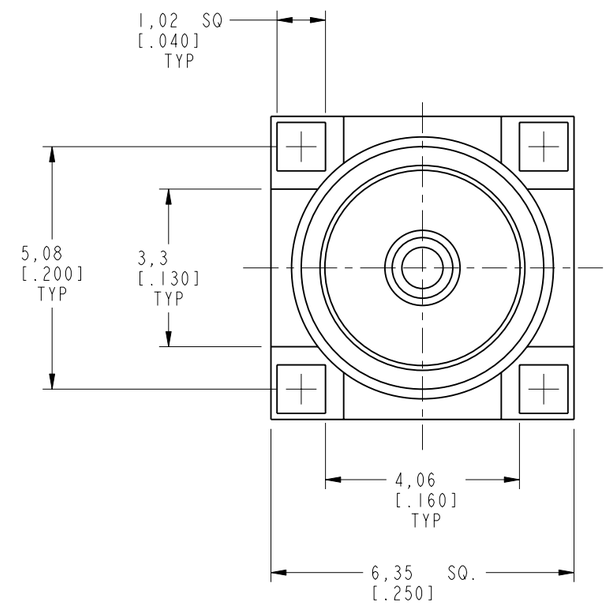

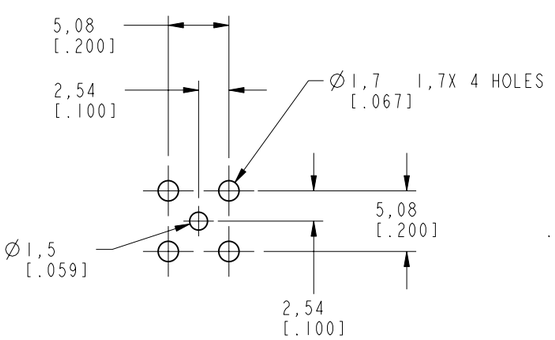

RECOMMENDED PCB
MOUNTING HOLE
SCALE 2.000

CUSTOMER OUTLINE DRAWING

ALL OTHER SHEETS ARE FOR INTERNAL USE ONLY

UNLESS OTHERWISE SPECIFIED, DIMENSIONS ARE IN MM (INCHES) AND TOLERANCES ARE:

0.5 - 6mm	6 - 30mm	30 - 120mm
±0.2mm	±0.4mm	± 0.6mm

NOTICE - These drawings, specifications, or other data (1) are, and remain the property of Amphenol Corp. (2) must be returned upon request; and (3) are confidential and not to be disclosed to any person other than those to whom they are given by Amphenol Corp. The furnishing of these drawings, specifications, or other data by Amphenol Corp., or to any other person to anyone for any purpose is not to be regarded by implication or otherwise in any manner licensing, granting rights or permitting such holder or any other person to manufacture, use or sell any product, process or design, patented or otherwise, that may in any way be related to or disclosed by said drawings, specifications, or other data.

MATERIAL

REFERENCE
GEN# 901-144-8RFX_ASSY
EAR 1038
ANAREN PN: 57837-0001

DRAWN	DATE
C. McGRATH	6/30/03
ENGINEER	DATE
O. BARTHELMES	6/30/03
APPROVED	DATE
O. BARTHELMES	7/2/03

CAD FILE
I:\SMA\ 901-10112

TITLE
SMA PCB MOUNT JACK

Amphenol
Amphenol Corporation
Communication and Network
Products Division
Danbury, CT U.S.A. 06810

SCALE: 8.0:1 | SHEET 2 OF 2

CODE ID	DWG SIZE	DRAWING NO.	REV
74868	B	901-10112	C