PRODUCT SPECIFICATION:
PROTECTION CLASS - IP67
VOLTAGE RATING - 60 Vac / 75 Vdc
CONTACT CURRENT RATING - 4 Amps

PART No MATRIX

4	R	4	H	4	0	E	0	2	X	X	X	X	3

- 4R = Nano Change Receptacle
- Poles: 4 = 4 Poles
- Heads style: H40 = M8 Female/PG7 Male REC
- Wire: E02 = 1.43mm², PVC
- Units: M = Meter, C = Centimeter
- Length Examples: 005 = 0.5 m, 010 = 1 m, 020 = 2 m, 050 = 5 m, 100 = 10 m, 150 = 15 m, 200 = 20 m
- Shell Material: 3=Brass, Nickel Plated

PANEL CUTOUT

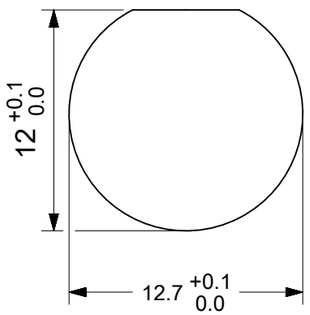

WIRING DIAGRAM

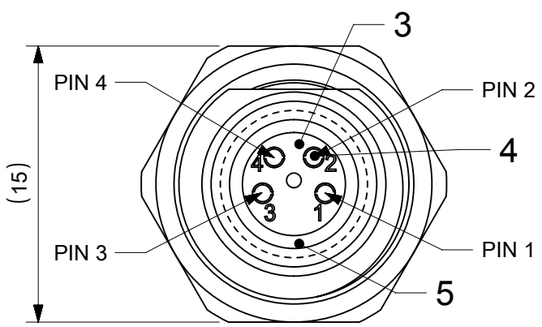

VIEW FROM THE FRONT SIDE

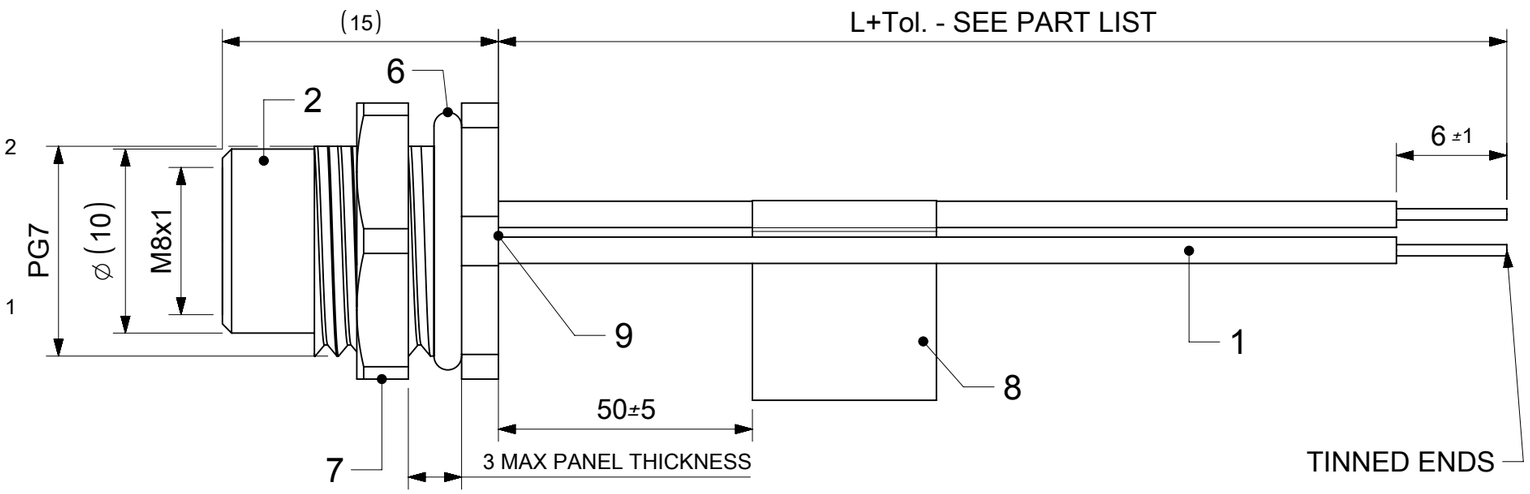

BILL OF MATERIALS

ITEM	QTY	DESCRIPTION	MATERIAL	FINISH/COLOR
9	-	POTTING MATERIAL	WEVO	-
8	1	LABEL	VINYL	YELLOW
7	1	LOCKNUT PG7	BRASS	NICKEL PLATED
6	1	O-RING	FPM	BLACK
5	1	GASKET 5x0.8	FKM	RED
4	4	CONTACT 10 FE	BRONZE	GOLD OVER NICKEL PLATED
3	1	INSERT M8 4P FE	PUR	BLACK
2	1	REC SHELL M8(FE)xPG7(M)	BRASS	NICKEL PLATED
1	-	WIRES;24AWG;OD=1.43mm	PVC	-

PART LIST

MOLEX PN	ENGINEERING NO	L+Tol.[mm]
1200310022	4R4H40E02C3003	300 +19
1200310035	4R4H40E02M0103	1000 +56

DOCUMENT STATUS	P1	RELEASE DATE	2018/11/13 10:33:10

THIS DRAWING CONTAINS INFORMATION THAT IS PROPRIETARY TO MOLEX ELECTRONIC TECHNOLOGIES, LLC AND SHOULD NOT BE USED WITHOUT WRITTEN PERMISSION

SYMBOLS: E = 0, C = 0, F = 0, S = 0, ▼ = 0, C = 0, ☒ = 0, ■ = 0, ▽ = 0

DIMENSION UNITS: mm
SCALE: 3:1
GENERAL TOLERANCES (UNLESS SPECIFIED)
ANGULAR TOL ± °
4 PLACES ±
3 PLACES ±
2 PLACES ±
1 PLACE ±
0 PLACES ±
DRAFT WHERE APPLICABLE MUST REMAIN WITHIN DIMENSIONS

CURRENT REV DESC:
EC NO: 607527
DRWN: MKOWALCZYK01 2018/11/09
CHK'D: DSTACHOWIAK 2018/11/13
APPR: DSTACHOWIAK 2018/11/13
INITIAL REVISION:
DRWN: MKOWALCZYK01 2018/11/09
APPR: DSTACHOWIAK 2018/11/13

THIRD ANGLE PROJECTION
DRAWING: A3-SIZE
SERIES: 120031

molex

NC-4P-XW-FE-REC
PG7-XXM-PVC

PRODUCT CUSTOMER DRAWING

DOCUMENT NUMBER	DOC TYPE	DOC PART	REVISION
1200310022	PSD	000	A

MATERIAL NUMBER	CUSTOMER	SHEET NUMBER
SEE PART LIST	GENERAL MARKET	1 OF 1

FORMAT: master-tb-prod-A3
REVISION: H
DATE: 2018/01/18