PART NUMBER	AMPS	VOLTS	FUSE SUB-ASSEMBLY	CATALOG NUMBER	DESCRIPTION	UPC CODE	CE LOGO	CSA LOGO	I.R. REQ'D	UL RECOGNIZED	RoHS LOGO	Pb-FREE LOGO
047901.5MXEP	1.5	600	47901.5W-P	047901.5	FUSE 600V FA PT 2AG PB-FREE 1.5A	079458 15669	YES	NO	20A 600V AC	YES	YES	YES
0479002.MXEP	2	600	479002W-P	0479002.	FUSE 600V FA PT 2AG PB-FREE 2A	079458 15670	YES	NO	20A 600V AC	YES	YES	YES
047902.5MXEP	2.5	600	47902.5W-P	047902.5	FUSE 600V FA PT 2AG PB-FREE 2.5A	079458 15671	YES	NO	20A 600V AC	YES	YES	YES
0479003.MXEP	3	600	479003W-P	047903.	FUSE 600V FA PT 2AG PB-FREE 3A	079458 15965	YES	NO	20A 600V AC	YES	YES	YES
0479004.MXEP	4	600	479004W-P	047904.	FUSE 600V FA PT 2AG PB-FREE 4A	079458 15966	YES	NO	20A 600V AC	YES	YES	YES
0479005.MXEP	5	600	479005W-P	047905.	FUSE 600V FA PT 2AG PB-FREE 5A	079458 15967	YES	NO	20A 600V AC	YES	YES	YES

LTR	DATE	REVISION	CHK	APD
A	1/14/08	000272ER - RELEASED RP		
B	2/07/08	000295ER - RELEASED 3, 4 & 5A RP		

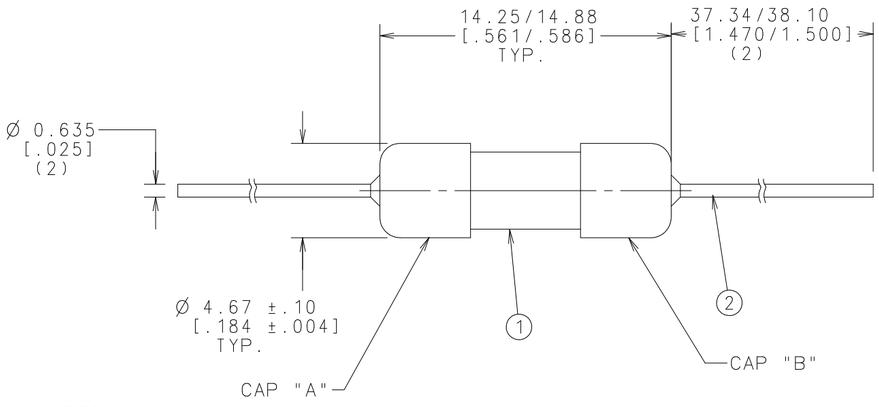

NOTES:

1. MEASURE COLD RESISTANCE PER ES-001030.
2. CAP TO LEAD WELD SHALL WITHSTAND A PULL OF 10 LBS. WITHOUT SEPARATING.

PACKAGING NOTES:

1. PACK 1000 FUSES IN CARTON, FILL WITH FOAM PAD. CLOSE AND SEAL WITH TAPE 088120 AND LABEL.
2. LABEL TO BE APPLIED TO THE END OF THE BOX WITH BAR CODE PORTION WRAPPED AROUND THE SIDE.

NOTE: LABEL ILLUSTRATION(S) IS FOR REFERENCE ONLY. THE ACTUAL COPY AND REGULATORY MARKINGS WILL VARY BY THE INDIVIDUAL PART NUMBER SEE CHART.

NO	COMPONENT NO	DESCRIPTION	QTY/M	U/M
-	580460	CARTON	1	EAD
2	082706	LEAD WIRE	214	G
1	SEE CHART	FUSE SUB-ASSEMBLY	1000	EA

BILL OF MATERIAL

UNLESS OTHERWISE SPECIFIED, DIMENSIONS ARE IN MILLIMETERS. DIMENSIONS IN BRACKETS [ ] ARE INCHES

UNLESS OTHERWISE SPECIFIED, DIMENSIONS DO NOT INCLUDE PLATING.

O	DENOTES CRITICAL CHARACTERISTICS.
CPK	DENOTES CPK DIMENSIONS,-MINIMUM CPK VALUE
ST	DENOTES A CHARACTERISTIC THAT PROVIDES AN INDICATION OF PROCESS PERFORMANCE. PROCEDURE FOR MEASUREMENT AND TRACKING TO BE DEFINED IN LITTELFUSE INSPECTION INSTRUCTIONS.
CP	DENOTES CP DIMENSIONS,-MINIMUM CP VALUE MUST BE WITHIN THE DIMENSIONAL LIMITATIONS SHOWN ON DRAWING AND INITIALLY LOCATED TO ALLOW FOR MAXIMUM TOOL LIFE.

COPIES TO

1	9	18
2	10	19
3	12	20
4	13	21
5	14	23
6	15	33
7	16	43
8	17	53

MATL SPEC

FINISH

DRW RP DATE 1/14/07 SCALE 4:1

CHK DATE SUPER DR

APPD DATE FINISH GOOD WT GRAMS/PIECE

TOLERANCE UNLESS OTHERWISE SPECIFIED
TWO PLACE DEC ±.25[.01] FRACTION ±
THREE PLACE DEC ±.100[.004] ANGULAR ±1°

3RD ANGLE PROJECTION

TITLE 2AG FAST ACTING FUSE WITH WELDED LEADS 1000 PACK

Littelfuse®
DES PLAINES, ILLINOIS 60016

REVISION B

DRWG. NO. 0479000.MXEP SERIES

FINAL

UNCONTROLLED DOCUMENT

CAD GENERATED DRAWING - NO PENCIL CHANGES ALLOWED