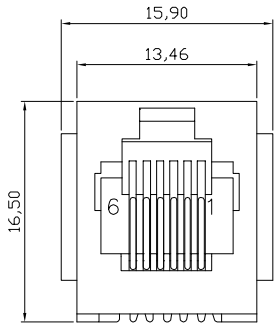

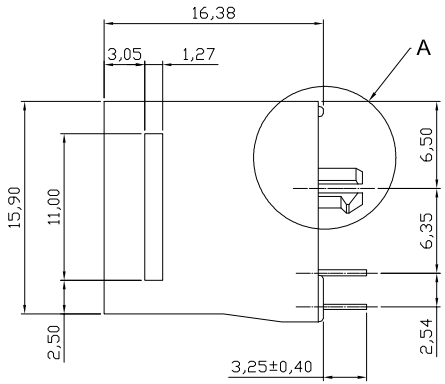

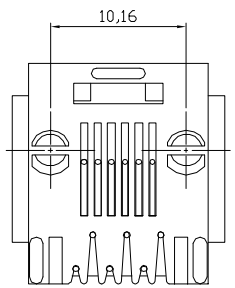

Specification:

1. Electrical Char
   Insulation Resistance: 500MΩ min. 500V DC for 1 minute
   Contact Resistance: 20mΩ max.
   Rating Current: 1.5A max.
   Rating Voltage: 120V AC
   Dielectric Voltage: 1000 Vrms at 1MA 60 sec. min.

2. Physical Char
   Housing: PBT Glass filled (UL 94V-0) Color: Black
   Soldering Temperature: 235°C for 5 sec.
   Spring Wire: 0.45mm Dia Phosphor Bronze
   6u" Gold plating over Nickel
   Temperature Range: -40°C to +85°C
   Durability: 500 mating cycles min.

3. Packing: Tray

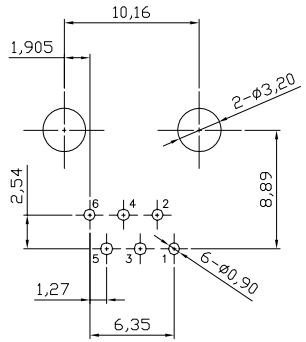

PCB Layout
(Top View)

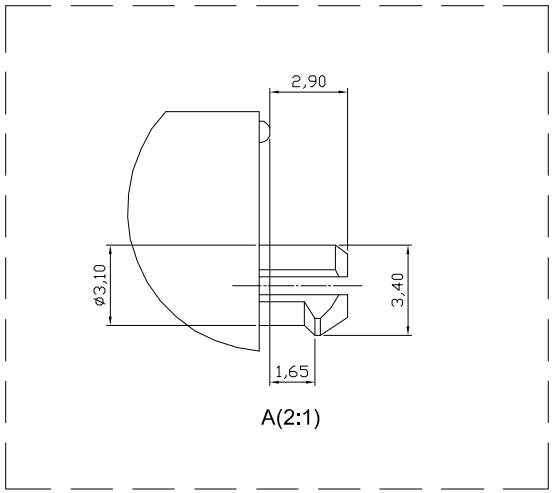

A(2:1)

RoHS compliant
Unit:mm

Scale	Free
TOLERANCE	
.XX	±0.20
.XXX	±0.13
.XXXX	±0.05
DIM	TOL
Angle	+0°30'

Id.	Modification	Date	Name
0	Drawn	28.10.2015	Amy

	Date	Name
Drawn	28.10.2015	Amy
Approved	28.10.2015	Amy

ASSMANN WSW components

Customer-No.

ASSMANN WSW-No. A-2014-1-4-R

Drawing-No. ASS 7042 CO

rev00

Replace

SHEET