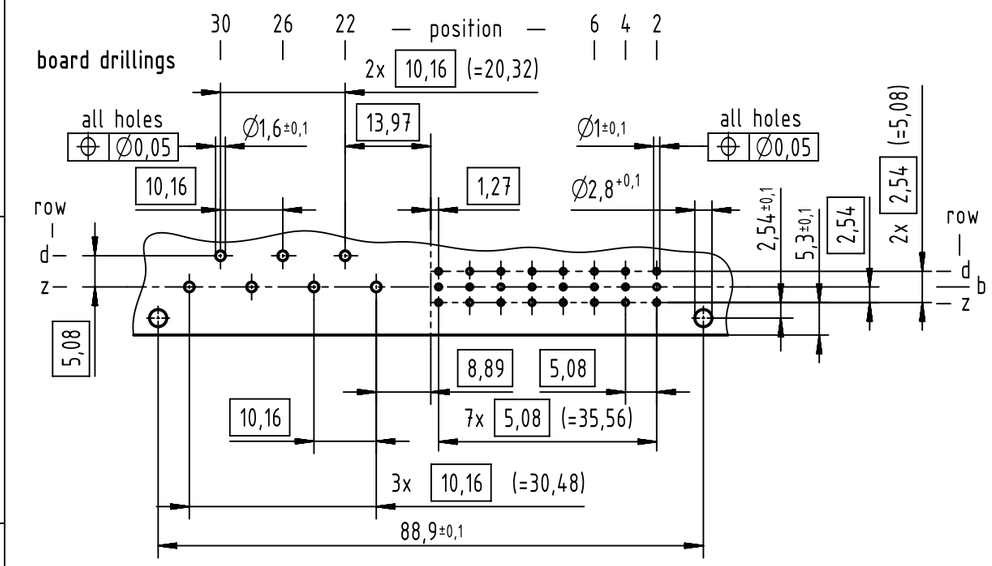

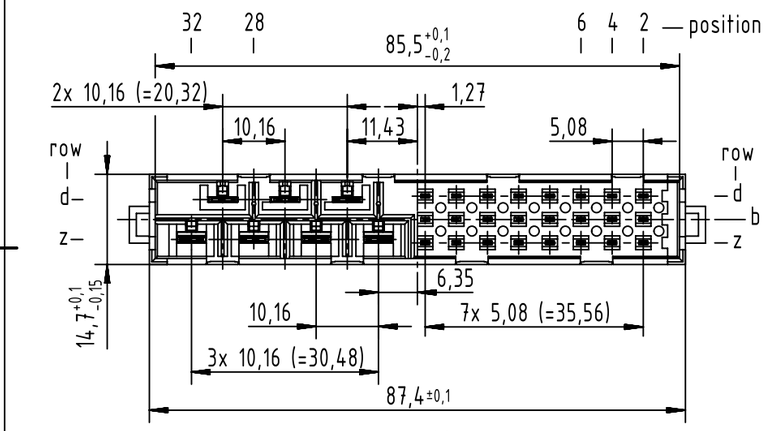

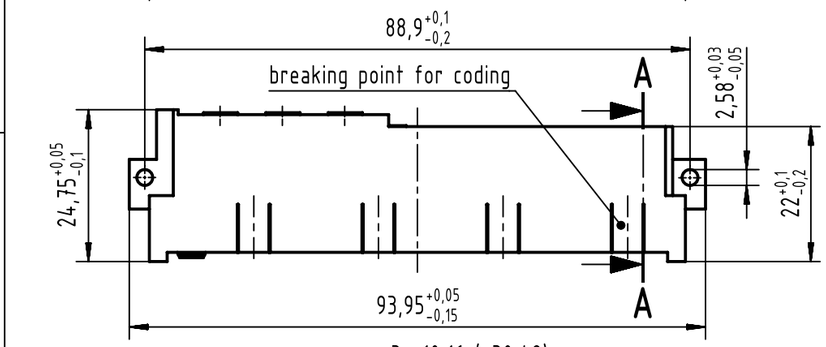

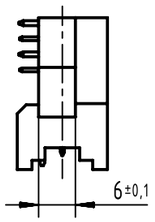

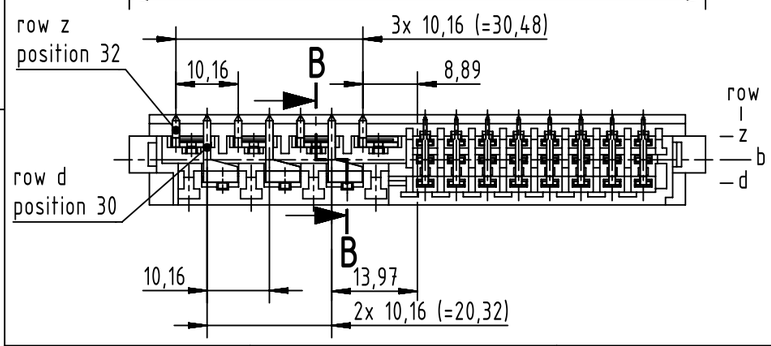

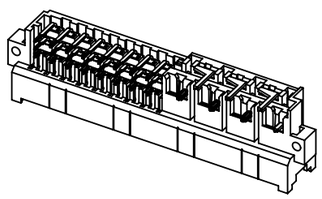

A-A (2:1)

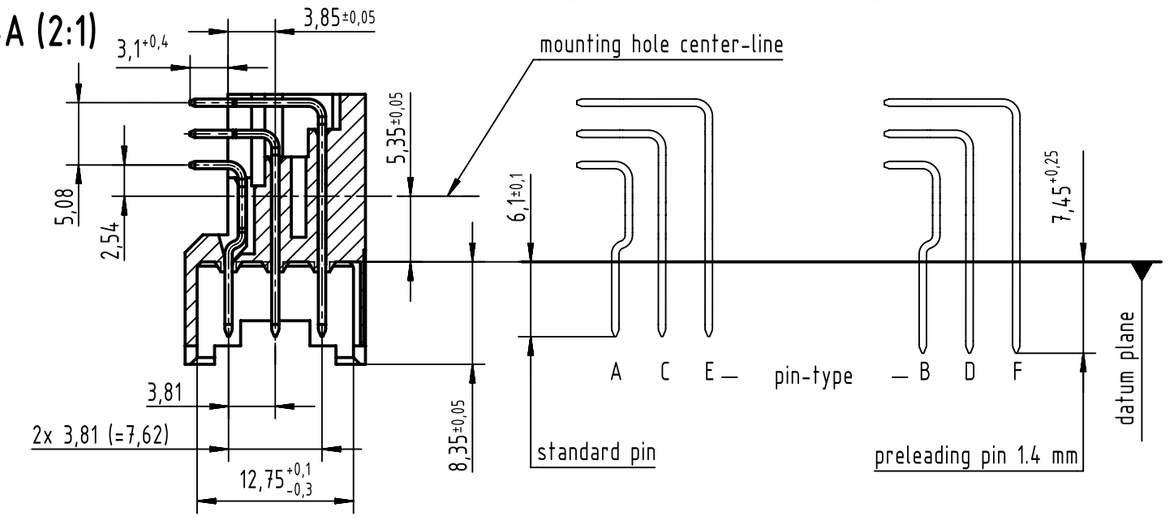

B-B ↶ 90° (2:1)

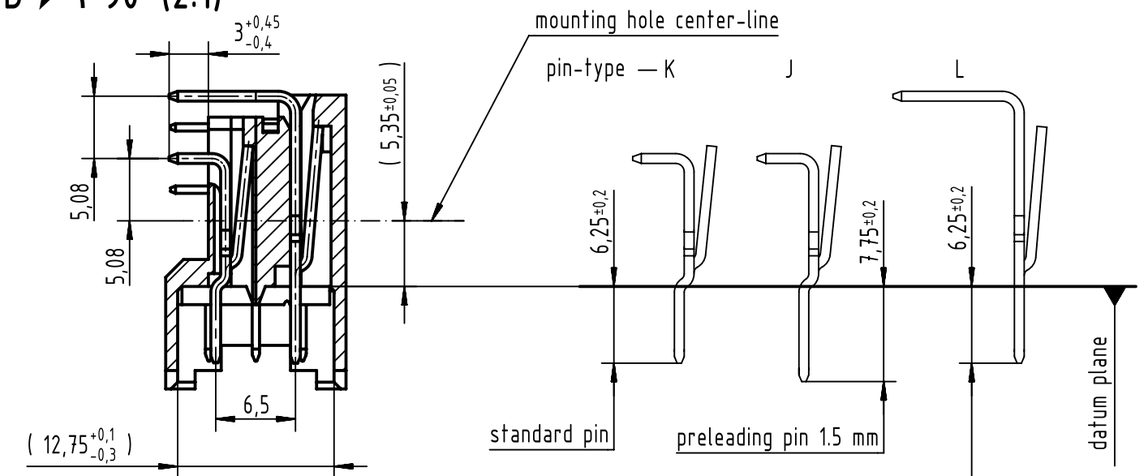

contact loading

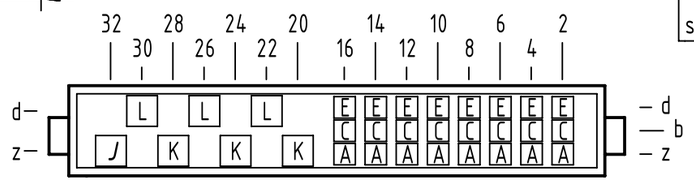

09 06 131 6922	2
09 06 131 2922	1
part no.	performance level (1)

(1) further information see: DS 09061200001

All Dimensions in mm
Original Size DIN A3

Scale 1:1

Free size tol.
complementary IEC 60603-2

Ref.
Sub. TB 09 06 131 x922 / Mod. 35260 / 17.09.2008

All rights reserved

Department EL PD

HARTING Electronics GmbH
D-32339 Espelkamp

Created by	Inspected by	Standardisation	Date	State
LEHNERT	DAHMS	HOFFMANN	2018-08-20	Final Release

Title: DIN Power type MH 24+7 male solder angled 31-pole

Doc-Key / ECM-Nr.
100184614/UGD/020/B
500000138995

Type: TB
Number: 0906131X922
Rev.: B
Page: 1/1

A3