DRAWING MADE IN THIRD ANGLE PROJECTION

1852095 ⇔ 1852095

PART NUMBER	REV	FIRST USED
1852095 −1	A	122500−1
1852095 −2	A	565435−5
1852095 −3	A	354500−1

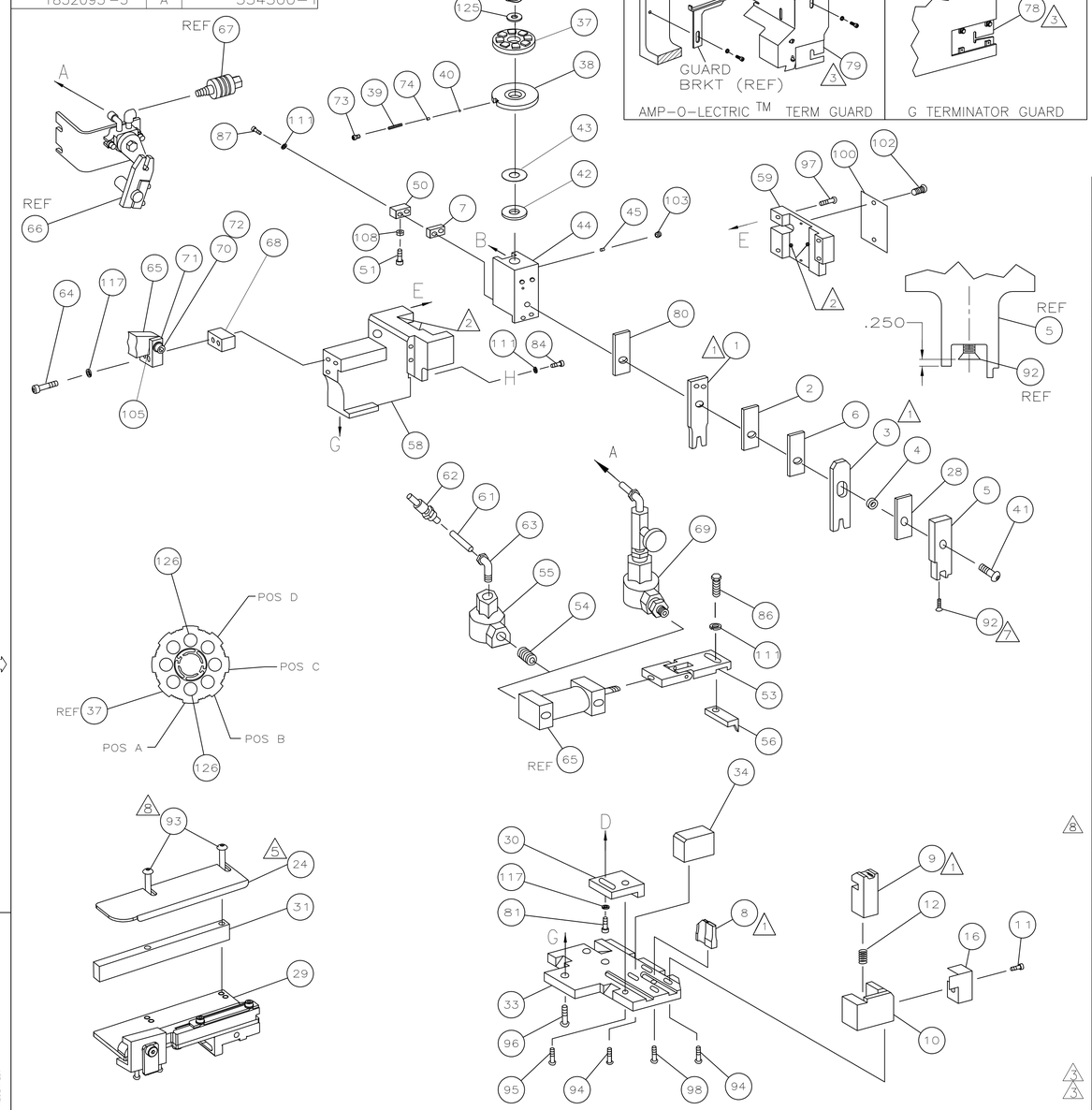

TERMINAL NAME: RECEPTACLE △6

AMP TERM PN	MFR TERM PN
1572762	23124472620

AMP SEAL PN	MFR SEAL PN
1572766	10800472742

KOSTAL TERMINAL AMP CRIMP SPECS

PAD LTR	CRIMP HEIGHT	WIRE SIZE
A	.126 ±.002 [3.20 ±0.05mm]	10 awg
B	NOT	USED
C	NOT	USED
D	NOT	USED

CRIMP	SIZE	TYPE	RANGE
WIRE	.190 [4.83mm]	F	10 awg
INSUL	.300 [7.62mm]	0	Ø246 MAX

WIRE STRIP LENGTH	TERM APPL SPEC	FEED	APPL INSTRUCTION	SET UP GAGE	LAYOUT
.351−.368	NONE	.967	408−8040	458637−1	L1852095

−3	−2	−1	U/M	DWG SIZE	PART NO	DESCRIPTION	ITEM NO
							129
							128
							127
2	2	2	–	C	354779−6	PIN, WIRE DISC (.3020)A	126
1	1	1	–	A	986950−1	WASHER, FLAT PRECISION	125
1	1	1	–	A	217238−1	GENERAL INSTRUCTION PACKAGE	124
1	1	1	–	–	4088040	SF APPL INST 408−8040	123
							122
							121
							120
							119
							118
3	3	3	–	A	21024−5	WASHER, LOCK(#10)ADJ BLOCK	117
							116
							115
							114
							113
							112
4	4	4	–	A	21024−4	WASHER,LOCK(#8)STRIPPER	111
							110
							109
1	1	1	–	A	21018−5	NUT,HEX(NO.6)HOLDDOWN	108
							107
							106
1	1	1	–	A	371178	BASE MOUNT WASHER	105
1	1	–	–	A	992031−1	PIN, CLEVIS	104
1	1	1	–	A	21009−2	SCR,SKT SET(1/4−20x.25 LW)RAM	103
2	2	2	–	A	21017−2	SCR,DRIVE(#2x.19)ID PLATE	102
							101
1	1	1	–	B	461264−1	PLATE, IDENTIFICATION	100
							99
1	1	1	–	A	22733−8	SCR,BHC(8−32x.38 LW)ANVIL	98
4	4	4	–	A	2−21002−9	SCR,BHC(10−32x.75)CAP	97
3	3	3	–	A	2−22733−8	SCR,BHC(1/4−20x.62)HSG	96
1	1	1	–	A	2−21002−7	SCR,BHC(10−32x.50)SG ADJ BLK	95
4	4	4	–	A	2−21002−2	SCR,BHC(8−32x.50)TERM H DWN	94
2	2	2	–	A	9−21002−6	SCR,BHC(8−32x.88)R STP GDE	93
1	1	1	–	A	1−21003−9	SCR,FHC(6−32x.38)DEP	92
							91
							90
1	1	–	–	A	7−21000−9	SCR,SHC(4−40x.19)STRIPPER	89
							88
2	2	2	–	A	2−21000−8	SCR,SHC(8−32x.62)DEP−HOLD	87
1	1	1	–	A	2−22603−1	SCR,HEX HD(8−32x.38)FEED FINGER	86
							85
1	1	1	–	A	2−21000−7	SCR,SHC(8−32x.50)STRIPPER	84
							83
							82
1	1	1	–	A	3−21000−4	SCR,SHC(10−32x.38)SG ADJ BL	81
1	1	1	–	C	455888−2	SPACER, CRIMPER	80
–	1	–	–	B	462992−7	GUARD ASSY	79
REF	–	–	–	B	679532−1	INSERT, GUARD	78
							77
							76
							75
1	1	1	–	A	690603−1	SPRING, ASSIST	74
1	1	1	–	A	23030−1	SCR,SHC(6−32x.25 SL)INS DISC	73
1	1	1	–	A	3−21001−5	SCR,SHC(3/8x1.00)FEED MT	72
1	1	1	–	B	459610−3	MOUNT, FEED BRACKET	71

QTY REQD PER ASSY — PARTS LIST

−1	LEADMAKER	AIRFEED
−2	BENCH MODEL K	AIRFEED
−3	BENCH MODEL G	AIRFEED

−3	−2	−1	U/M	DWG SIZE	PART NO	DESCRIPTION	ITEM NO
1	1	1	–	A	21024−8	WASHER,LOCK(3/8)FEED BRKT	70
–	1	–	–	C	692655−5	AIR FEED VALVE ASSY	69
1	1	1	–	A	461690−1	SPACER, AIR FEED	68
–	REF	–	–	A	24042−2	VALVE, SHUT OFF	67
–	REF	–	–	C	692655−6	AIR FEED VALVE ASSY	66
1	1	1	–	B	461065−2	AIR FEED ASSY (2 INCH)	65
2	2	2	–	A	4−21000−3	SCR,SHC(10−32x2.00)AIR ASSY	64
1	–	1	–	A	980285−2	ELBOW, SWIVEL 1/8 NPT − 1/4 T	63
1	–	1	–	A	23238−1	QUICK DISCONNECT	62
21.00	–	21.00	IN	A	27319−4	TUBING, POLY−FLO Ø.25	61
							60
1	1	1	–	C	454220−1	CAP, RAM	59
1	1	1	–	D	454485−1	HOUSING	58
							57
1	1	1	–	B	458537−2	PAWL, FEED	56
1	–	1	–	A	22374−7	VALVE, QUICK EXHAUST	55
1	–	1	–	A	22304−1	NIPPLE, HEX	54
1	1	1	–	B	461062−1	FEED FINGER ASSY	53
							52
1	1	1	–	A	811242−2	BUMPER, HOLDDOWN	51
1	1	1	–	A	690753−1	SPACER, TONKER	50
							49
							48
							47
							46
1	1	1	–	A	690191−1	PLUG, NYLON	45
1	1	1	–	C	1−819307−0	RAM	44
1	1	1	–	A	690125−1	WASHER, LAMINATED	43
1	1	1	–	A	690124−5	WASHER, RAM	42
1	1	1	–	A	2−24921−5	BOLT, CRIMPER(5/16x1.25)	41
1	1	1	–	A	23241−6	BALL, STEEL	40
1	1	1	–	A	690170−1	SPRING, COMPRESSION	39
1	1	1	–	C	1−690142−2	DISC, INSULATION	38
1	1	1	–	D	354777−1	DISC, WIRE	37
1	1	1	–	A	22480−5	WASHER, SPRING	36
1	1	1	–	B	690212−1	POST, RAM	35
1	1	1	–	B	2−690786−3	SUPPORT, TERMINAL	34
1	1	1	–	D	318055−4	PLATE, BASE	33
							32
1	1	1	–	B	1−1320908−2	SPACER, STRIP GUIDE	31
1	1	1	–	B	455689−1	BLOCK, STRIP GUIDE ADJ	30
1	1	1	–	C	1633091−7	STRIP GUIDE ASSEMBLY	29
1	1	1	–	C	1−455888−7	SPACER, FRONT SHEAR DEP	28
							27
							26
							25
1	1	1	–	D	1320928−3	GUIDE, STRIP (REAR)	24
							23
–	–	1	–	B	690472−2	STRIPPER	22
							21
1	1	–	–	A	679218−1	STRIPPER WIRE STOP ASSY	20
1	1	–	–	B	458949−1	STRIPPER	19
							18
							17
1	1	1	–	B	318563−1	GUARD, CHIP, FRONT	16
							15
							14
							13
1	1	1	–	A	5−22280−0	SPRING, SHEAR	12
1	1	1	–	B	690461−1	STOP, SHEAR	11
1	1	1	–	C	2−690459−2	HOLDER, SHEAR (FRONT)	10
1	1	1	–	C	318059−5	SHEAR, FLOAT (FRONT)	9
1	1	1	–	C	1633332−1	ANVIL	8
1	1	1	–	C	240641−3	SPACER, DEPRESSOR (REAR)	7
1	1	1	–	C	2−455888−7	SPACER, CRIMPER	6
1	1	1	–	C	122399−4	DEPRESSOR, SHEAR (FRONT)	5
1	1	1	–	B	238011−1	SPACER, BLOCK CRIMPER	4
1	1	1	–	C	4−1583690−4	CRIMPER, INSULATION	3
1	1	1	–	C	2−455888−5	SPACER, CRIMPER	2
1	1	1	–	C	1−1633305−5	CRIMPER, WIRE	1

QTY REQD PER ASSY — PARTS LIST

REVISION OF EACH ASSY NO (WHEN BLANK, USE DWG REVISION)

△1 RECOMMENDED SPARE PARTS.

△2 GREASE LIGHTLY.

△3 GUARD MUST BE IN PLACE WHEN OPERATING APPLICATOR IN A BENCH MACHINE.

△4 SEE DRAWING FOR COMPONENTS

△5 REAR STRIP GUIDE TO GUIDE ON INSULATION BARREL.

△6 THIS APPLICATOR APPLIES TERMINAL WITH A SEAL.

△7 APPLY TORQ−SEAL IN ALLEN SOCKET TO FILL HOLE AFTER FLAT HD HAS BEEN ADJUSTED TO CORRECT HEIGHT AT QUALIFICATION. APPLY PN 1−23419−5 LOC−TITE TO THREADS.

△8 CUT TO LENGTH AT ASSEMBLY.

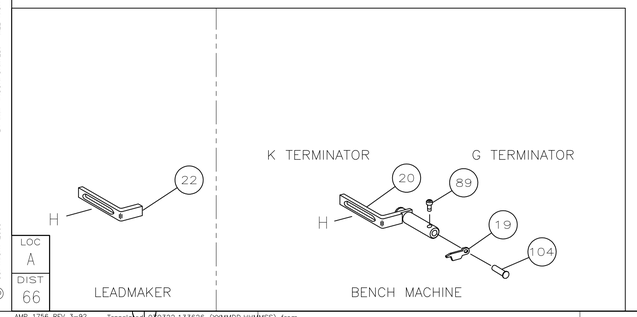

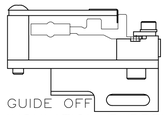

GUIDE OFF INSULATION BARREL

P	F	LTR	REVISION RECORD	APP	DATE
		A1	ECR−08−022358	DM	SEPT08
		A	RELEASED	RK	AUG05

DIMENSIONS IN INCHES. DO NOT SCALE PRINT. TOLERANCES UNLESS OTHERWISE SPECIFIED: 2 PLC DEC ±.25, 3 PLC DEC ±−, 4 PLC DEC ±−, ANGLES ± −. SURF TEXTURE: √. REMOVE BURRS, BREAK SHARP EDGES R.015 MAX

MATL – | HT TR – | FIN –

DR 28JUL05 R. KNEPPER | APP 28JUL05 T.ELBIN

CHK 22AUG05 G.BAILEY | REL 22AUG05 R.KNEPPER

AMP — Tyco Electronics, Harrisburg, PA 17105−3608

NAME SIDE FEED HDM APPLICATOR | MACHINE REF MINI APPL

SCALE – | D | DWG NO 1852095 | SHEET 1 OF 1 | REV A1

CAGE CODE 00779 | CUSTOMER AND ASSEMBLY DRAWING | RESTRICTED TO –

THIS DRAWING IS A CONTROLLED DOCUMENT.
RELEASED FOR PUBLICATION AUGUST 22,2005
BY AMP INCORPORATED. ALL RIGHTS RESERVED.
© COPYRIGHT 2005

LOC A | DIST 66