~~THIS DRAWING IS UNPUBLISHED.~~ RELEASED FOR PUBLICATION 2003
© COPYRIGHT 2003 BY TYCO ELECTRONICS CORPORATION. ALL RIGHTS RESERVED.

LOC	DIST
1	-

REVISIONS

P	LTR	DESCRIPTION	DATE	DWN	APVD
	B2	P/N 293009-3 ADDED AS PRELIMINARY	02 DEC 2009	PKS	RRP
	B3	PN 293009-3 RELEASED	10MAR2011	PKS	MP
	B4	REVISED PER ECR-21-102873	17MAY2021	PJ	FL
	B5	ECR-22-134605	01APR2022	SM	FL

POLARIZATION KEYS SCHEME

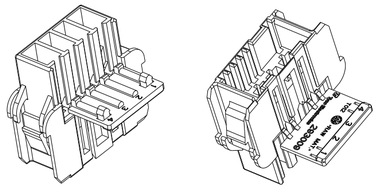

SCALE 1:1

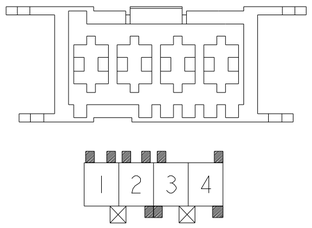

1-293009-3

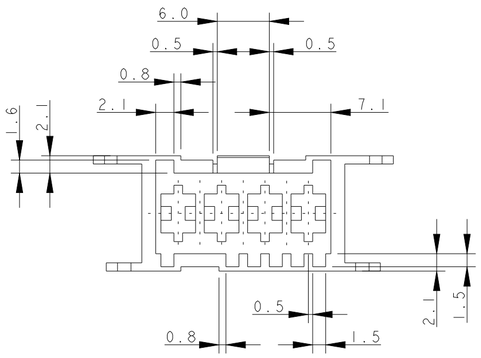

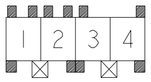

293009-1
293009-2
293009-3

PANEL MOUNT DIMENSIONS
SCALE 1:1

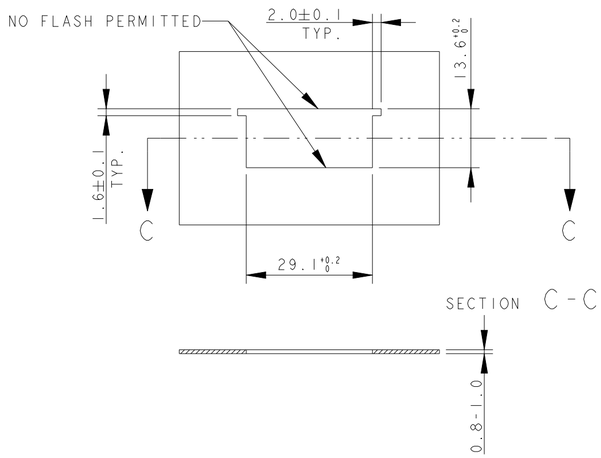

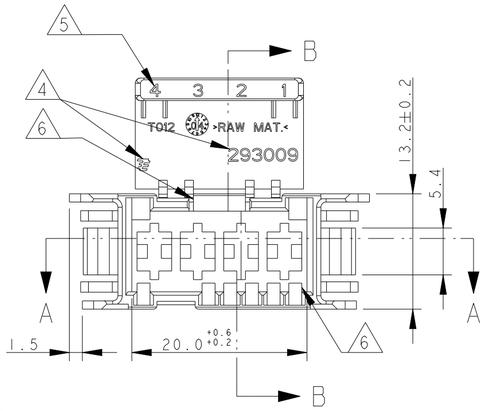

SECTION A-A

SECTION B-B

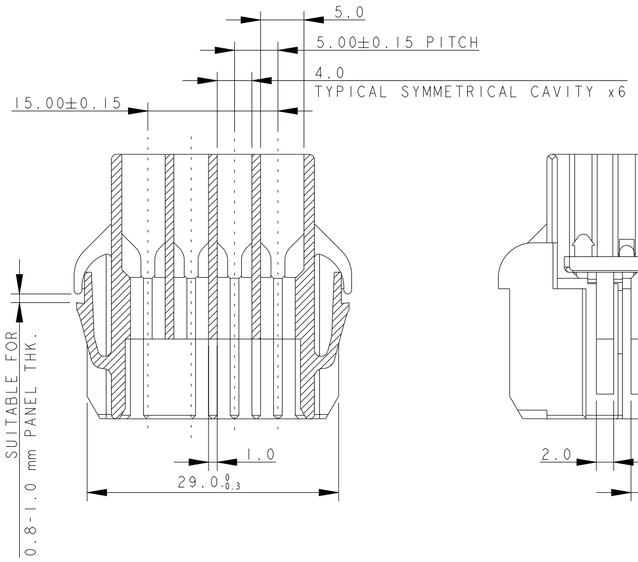

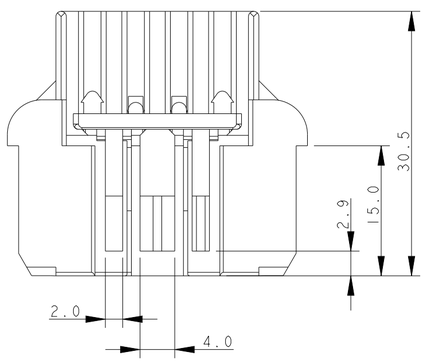

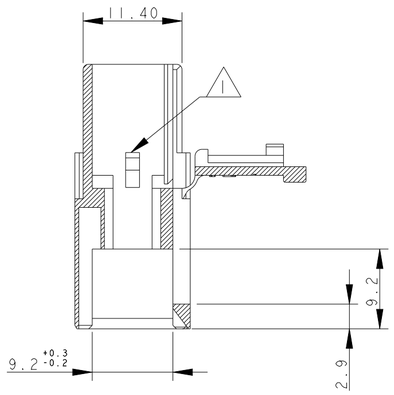

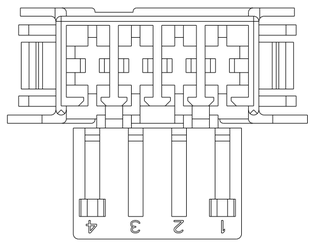

1. TYPICAL CAVITY SUITABLE FOR:
   FASTIN-FASTON TAB CONTACTS 6.3 mm SRS:
   P/N: 60294, 0.3-0.8 mm2 WIRE RANGE
   160691, 0.3-0.8 mm2 WIRE RANGE
   AMPLIVAR CONTACTS:
   P/N: 141051, 0.1-0.5 mm2 WIRE RANGE
   142411, 0.3-1.6 mm2 WIRE RANGE
   MAX. INSULATION DIA. 2.8 mm,
   MAX. INSULATION CRIMP WIDTH 3.3 mm.

2. PA6 UNFILLED, UL 94-V2, NATURE COLOUR ACCORDING TO IEC 60335-1 NORM.

3. PA66 UNFILLED, UL 94-V2, NATURE COLOUR

4. TE TRADEMARK "LOGO" AND TYCO ELECTRONICS "PART NUMBER" OPTIONAL POSITION.

5. CIRCUIT IDENTIFICATION NUMBERS, 1 TO 4

6. POLARIZATION KEYS DIMENTIONS AND POSITIONS ARE ACCORDING TO "RAST 5" NORM RAST CODE 04-B, 04-C, 04-F, 04-G.

7. PA66 UNFILLED, UL 94-V0 GWT, NATURE COLOUR

8. PRELIMINARY PART, NOT YET RELEASED FOR PRODUCTION

NATURAL	SEE NOTE 7	1-293009-3
NATURALE (NATUR)	VEDI NOTA 7 (SEE NOTE 7)	293009-3
NATURALE (NATUR)	VEDI NOTA 3 (SEE NOTE 3)	293009-2
NATURALE (NATUR)	VEDI NOTA 2 (SEE NOTE 2)	293009-1
COLORE (COLOUR)	MATERIALE (MATERIAL)	NUMERO (TE P/N)

P/N 293009-1, 293009-2, 293009-3 AS SHOWN

THIS DRAWING IS A CONTROLLED DOCUMENT FOR TYCO ELECTRONICS CORPORATION. IT IS SUBJECT TO CHANGE AND THE CONTROLLING ENGINEERING ORGANIZATION SHOULD BE CONTACTED FOR THE LATEST REVISION.

DIMENSIONS: mm

TOLERANCES UNLESS OTHERWISE SPECIFIED:
0 PLC ±-
1 PLC ±0.3
2 PLC ±-
3 PLC ±-
4 PLC ±-
ANGLES ±1°

MATERIAL: SEE TABLE
FINISH: SEE TABLE

DWN 29JAN2004 H. YAALI
CHK - C. TARTARI
APVD - -
PRODUCT SPEC 108-20256
APPLICATION SPEC -
WEIGHT -

Tyco Electronics
Tyco Electronics AMP Italia S.p.A.
C.so F. Cervi, 15 COLLEGNO (TO)

NAME: 4 POS. FASTIN-FASTON Connector TAB HOUSING, RAST 5 0.8-1.0 MM THK. PANEL MOUNT VERSION

SIZE	CAGE CODE	DRAWING NO	RESTRICTED TO
A2	00779	C-293009	

CUSTOMER DRAWING | SCALE 5:1 | SHEET 1 OF 1 | REV B5