THIS DRAWING IS UNPUBLISHED. RELEASED FOR PUBLICATION -.- .
© COPYRIGHT - BY TYCO ELECTRONICS CORPORATION. ALL RIGHTS RESERVED.

| LOC | DIST |
|---|---|
| GP | 00 |

REVISIONS

| P | LTR | DESCRIPTION | DATE | DWN | APVD |
|---|---|---|---|---|---|
| | O | RELEASED PER EC 0S13-0031-05 | 03-23-05 | LV | JG |

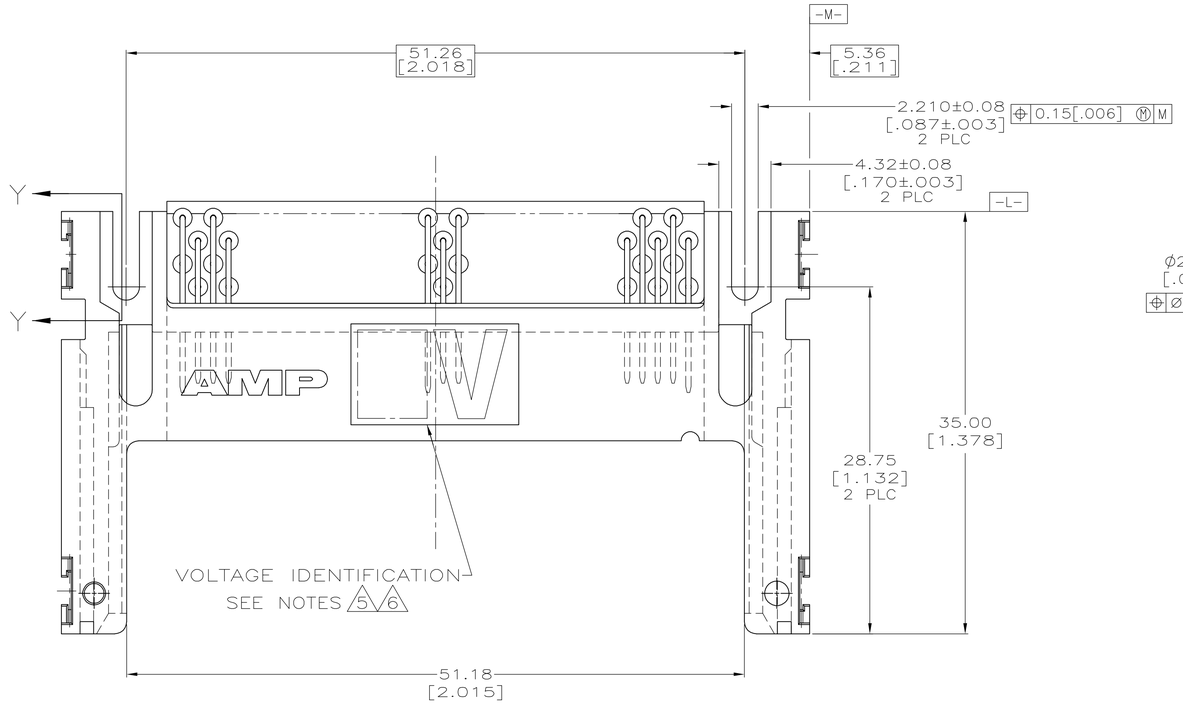


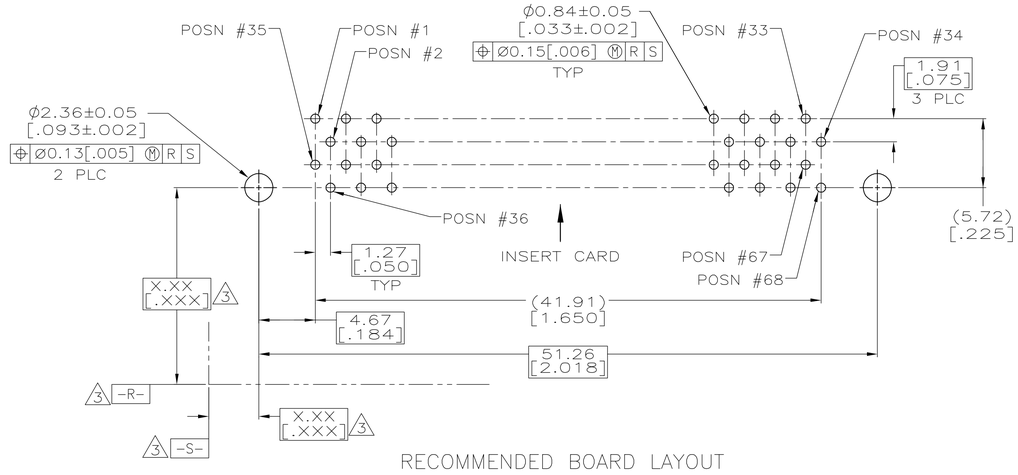


RECOMMENDED BOARD LAYOUT

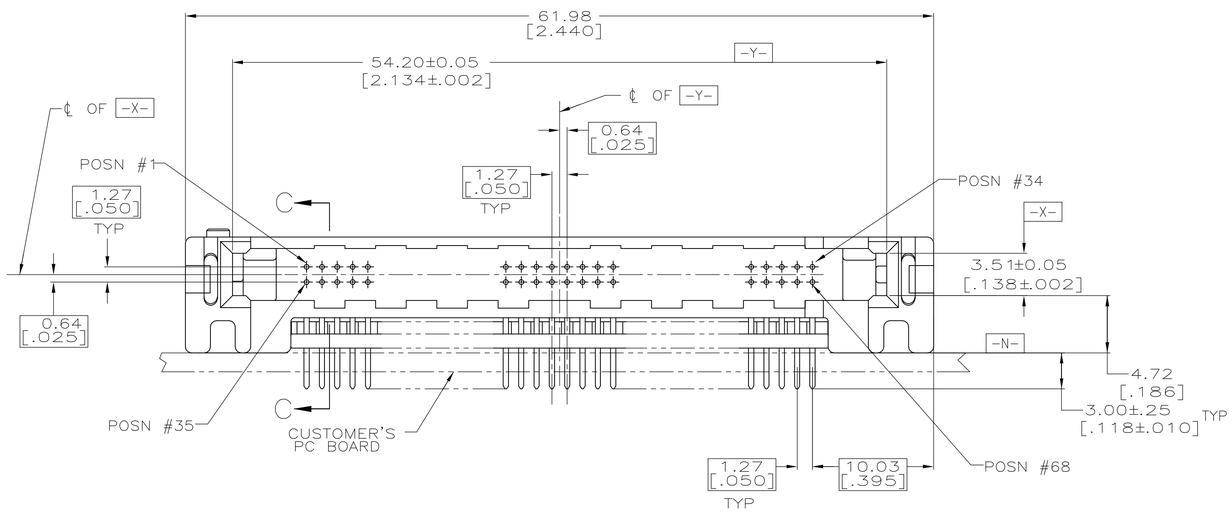


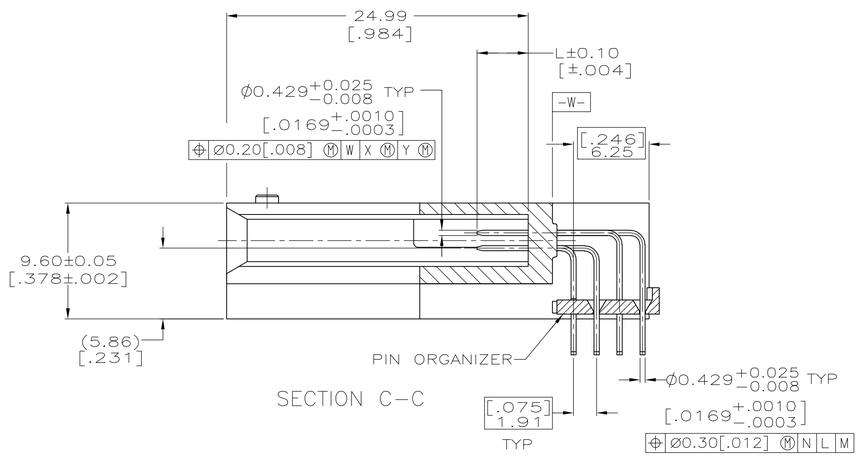


SECTION C-C

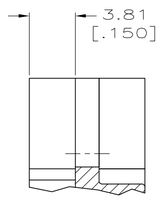


SECTION Y-Y

1. PINS: 0.00076[.000030] MINIMUM GOLD IN CONTACT AREA, 0.00381[.000150] MIN TIN ON SOLDER TAILS, ALL OVER 0.00127[.000050] MINIMUM NICKEL.
2. CUSTOMER TO PROVIDE CARD GUIDANCE SYSTEM.
3. DATUMS AND BASIC DIMENSIONS ESTABLISHED BY CUSTOMER.
4. CONNECTOR REQUIRES USE OF 2 - SIZE 2M SCREWS FOR FASTENING TO PRINTED CIRCUIT BOARD.
5. ASSEMBLY KEYED FOR 5 VOLT CARDS.
6. ASSEMBLY KEYED FOR LOW VOLT CARDS (3.3V).
7. HOUSING & ORGANIZER: LCP, COLOR; BLACK. PINS: BRASS.

| | | | | |
|---|---|---|---|---|
| 6 | 1,17,34 35,51,68 | ALL OTHER PINS | 36,67 | 5535655-2 |
| 5 | 1,17,34 35,51,68 | ALL OTHER PINS | 36,67 | 5535655-1 |
| VOLTAGE KEYING & IDENTIFICATION | 5.0 [.197] | 4.25 [.167] | 3.5 [.138] | PART NO |
| | "L" (PIN LENGTH) AND LOCATION | | | |

COPYRIGHT 2005
TYCO ELECTRONICS CORP
ALL RIGHTS RESERVED

THIS DRAWING IS A CONTROLLED DOCUMENT.

DIMENSIONS: mm [INCHES]

TOLERANCES UNLESS OTHERWISE SPECIFIED:
0 PLC ± -
1 PLC ± -
2 PLC ± 0.13 [.005]
3 PLC ± -
4 PLC ± -
ANGLES ± -

MATERIAL 7
FINISH 1

DWN L. VARELA - DOCK5 03-23-05
CHK S. BOLASH 03-23-05
APVD M. WALMSLEY 03-23-05
PRODUCT SPEC —
APPLICATION SPEC —
WEIGHT 8.5 GRAMS

tyco Electronics
Tyco Electronics Corporation
Harrisburg, PA 17105-3608

NAME
PIN HEADER ASSY, 68 POSN, RAISED HEIGHT, TOP BD MTG, THRU-HOLE, MEMORY CARD

| SIZE | CAGE CODE | DRAWING NO | RESTRICTED TO |
|---|---|---|---|
| A1 | 00779 | C-5535655 | — |

CUSTOMER DRAWING SCALE 4:1 SHEET 1 OF 1 REV O

AMP 4805 REV 31MAR2000