THIS DRAWING IS UNPUBLISHED. RELEASED FOR PUBLICATION 147382 ,147382
© COPYRIGHT 147382By – ALL RIGHTS RESERVED.

REVISIONS					
P	LTR	DESCRIPTION	DATE	DWN	APVD
	C4	REVISED PER ECO-11-005027	11MAR11	RK	HMR
	D	REVISED PER ECO-17-016552	21NOV2017	RS	JO

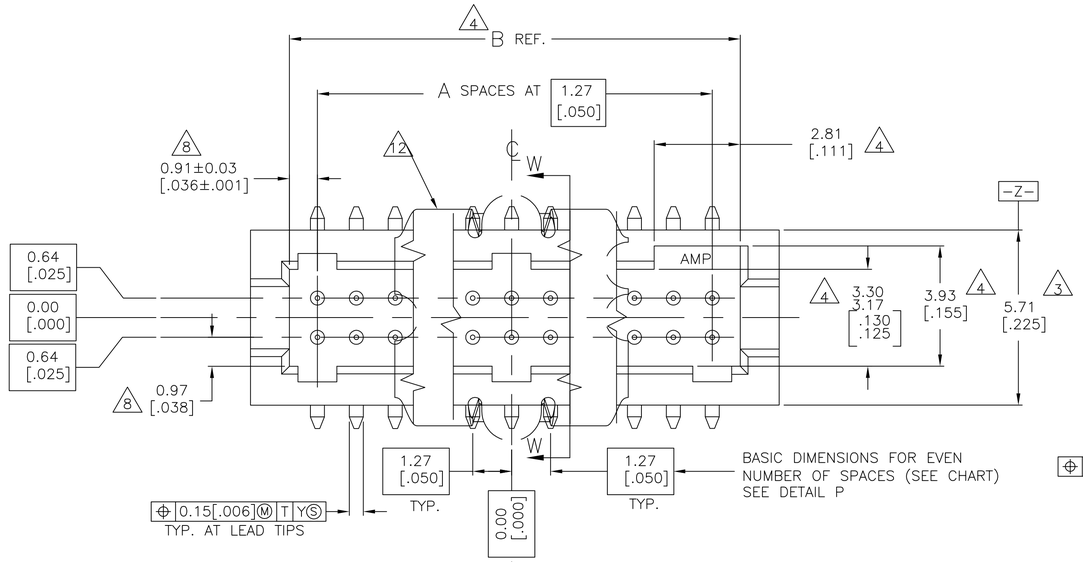

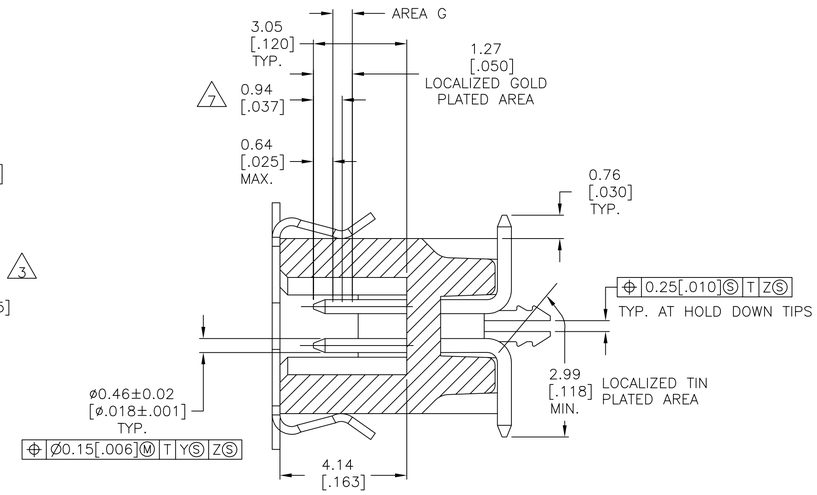

SECTION W–W

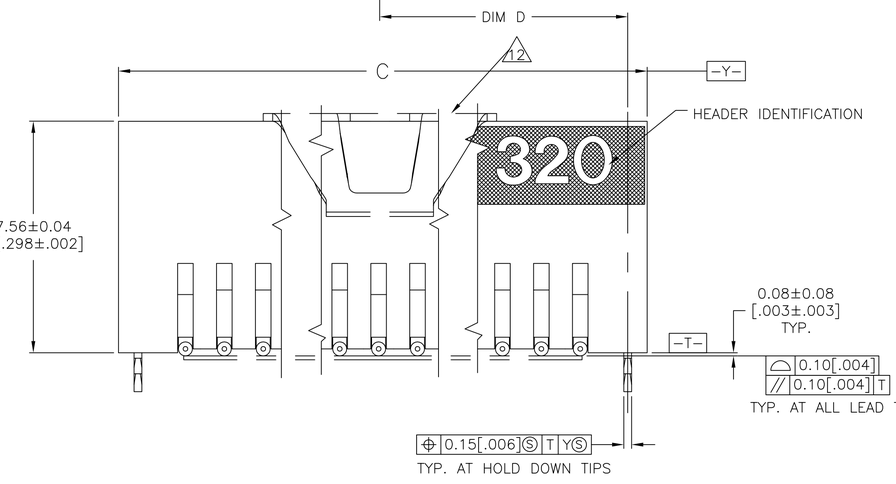

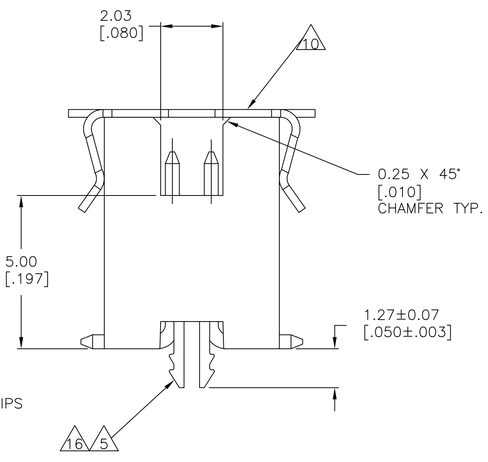

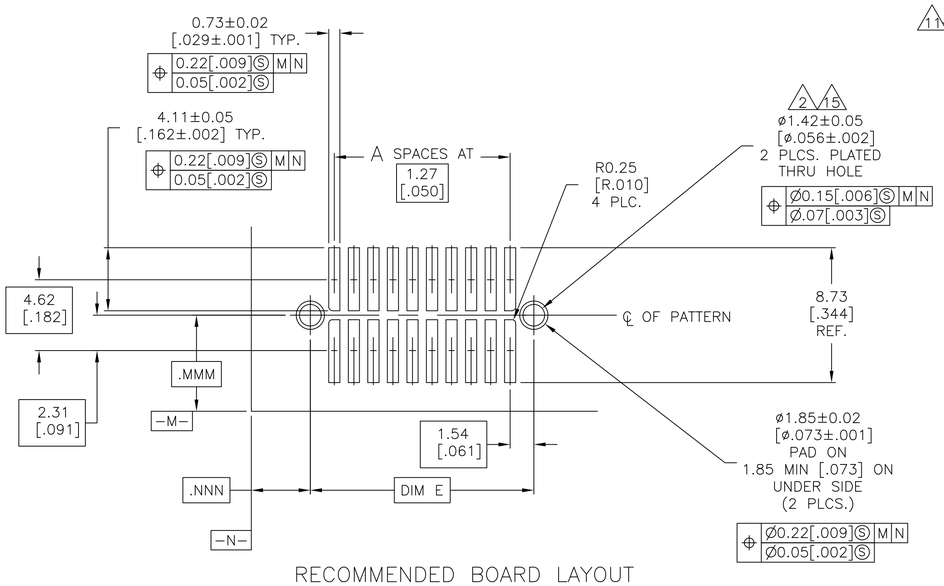

RECOMMENDED BOARD LAYOUT
SCALE 5:1

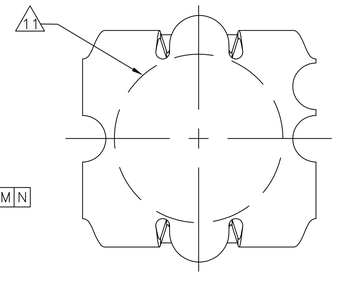

VACUUM COVER

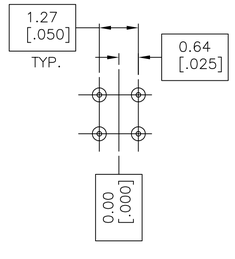

DETAIL P
BASIC DIMENSIONS FOR ODD NUMBER OF SPACES

1. 0.00076[.000030] GOLD AT POINT OF MEASUREMENT, 0.00051[.000020] MIN AT THE END POINTS OF AREA G, (LOCALIZED GOLD PLATE AREA), 0.0038[.000150] TIN–LEAD ON LOCALIZED TIN PLATED AREA, ALL OVER 0.0013[.000050] NICKEL
2. USE 1.55±0.02 [.0610±.0010] DRILLED HOLE (1.55mm DRILL). FINISH TO BE TIN–LEAD OVER 0.02 [.001] MIN COPPER.
3. DIMENSION APPLIES AT BASE OF SHROUD.
4. THE NOTED DIMENSIONS APPLY AT THE MATING FACE OF THE HOUSING.
5. 0.0038 [.000150] TIN–LEAD ON HOLD DOWN, ALL OVER 0.0013 [.000050] NICKEL.
6. IF PLANNING TO USE MORE THAN ONE MATING PAIR OF CONNECTORS TO INTERCONNECT 2 BOARDS, PLEASE REFER TO THE SPACING PARAGRAPH IN APPLICATION SPEC, #114–7010
7. POINT OF MEASUREMENT.
8. DIMENSIONS NOTED APPLY FROM THE BASIC DIMENSION LINE (NOT THE CIRCUIT CAVITY CENTER LINE) TO THE SURFACE INDICATED.
9. PACKAGED IN TAPE AND REEL PER EIA–481 SPECIFICATIONS, SEE CHART FOR TAPE WIDTHS.
10. VACUUM COVER DESIGNED FOR 4.0 [.160] DIA. NOZZLE. VACUUM COVER TO BE REMOVED AFTER SOLDERING.
11. 5.5 [.216] MIN TARGET AREA FOR VACUUM PICK–UP.
12. VACUUM COVER SHOWN IN PHANTOM LINE.
13. HOUSING: LCP, COLOR–BLACK. POST: PHOSPHOR BRONZE. HOLD DOWN: COPPER ALLOY VACUUM COVER: ALUMINUM.
14. 0.00076(.000030) GOLD AT POINT OF MEASUREMENT, 0.00051(.000020) MIN AT THE END POINTS OF AREA G, (LOCALIZED GOLD PLATE AREA), 0.0038(.000150) TIN ON LOCALIZED TIN PLATED AREA, ALL OVER 0.0013(.000050) NICKEL.
15. USE 1.55+/–0.02(.0610+/–.0010) DRILLED HOLE FINISH TO BE TIN OVER 0.02(.001)MIN COPPER.
16. 0.0038(.000150) TIN ON HOLDDOWN, ALL OVER .0013(.000050) NICKEL.
17. ROHS 2002/95/EC COMPLIANT.

FINISH	TAPE WIDTH	E	D	C	B	A	NUMBER OF POSITIONS	PART NUMBER
18 17 14 16	88mm	65.33 [2.572]	32.66 [1.286]	66.59 [2.622]	64.05 [2.522]	49	100	~~5–147382–9~~
18 17 14 16	72mm	52.63 [2.072]	26.31 [1.036]	53.89 [2.122]	51.35 [2.022]	39	80	~~5–147382–8~~
18 17 14 16	72mm	46.28 [1.822]	23.13 [.911]	47.54 [1.872]	45.00 [1.772]	34	70	~~5–147382–7~~
18 17 14 16	56mm	39.93 [1.572]	19.96 [.786]	41.19 [1.622]	38.65 [1.522]	29	60	~~5–147382–6~~
18 17 14 16	56mm	33.58 [1.322]	16.78 [.661]	34.84 [1.372]	32.30 [1.272]	24	50	~~5–147382–5~~
17 14 16	44mm	27.23 [1.072]	13.61 [.536]	28.49 [1.122]	25.95 [1.022]	19	40	5–147382–4
17 14 16	32mm	20.88 [.822]	10.43 [.411]	22.14 [.872]	19.60 [.772]	14	30	5–147382–3
17 14 16	32mm	14.53 [.572]	7.26 [.286]	15.79 [.622]	13.25 [.522]	9	20	5–147382–2
17 14 16	24mm	8.18 [.322]	4.08 [.161]	9.44 [.372]	6.90 [.272]	4	10	5–147382–1
18 1 5	88mm	65.33 [2.572]	32.66 [1.286]	66.59 [2.622]	64.05 [2.522]	49	100	~~147382–9~~
18 1 5	72mm	52.63 [2.072]	26.31 [1.036]	53.89 [2.122]	51.35 [2.022]	39	80	~~147382–8~~
18 1 5	72mm	46.28 [1.822]	23.13 [.911]	47.54 [1.872]	45.00 [1.772]	34	70	~~147382–7~~
18 1 5	56mm	39.93 [1.572]	19.96 [.786]	41.19 [1.622]	38.65 [1.522]	29	60	~~147382–6~~
18 1 5	56mm	33.58 [1.322]	16.78 [.661]	34.84 [1.372]	32.30 [1.272]	24	50	~~147382–5~~
1 5	44mm	27.23 [1.072]	13.61 [.536]	28.49 [1.122]	25.95 [1.022]	19	40	147382–4
18 SUPERSEDED BY 5–147382–3	1 5	32mm	20.88 [.822]	10.43 [.411]	22.14 [.872]	19.60 [.772]	14	30	~~147382–3~~
	1 5	32mm	14.53 [.572]	7.26 [.286]	15.79 [.622]	13.25 [.522]	9	20	147382–2
	1 5	24mm	8.18 [.322]	4.08 [.161]	9.44 [.372]	6.90 [.272]	4	10	147382–1

18 OBSOLETE PARTS: OBSOLETE CIS STREAMLINING PER D.RENAUD/D.SINISI

THIS DRAWING IS A CONTROLLED DOCUMENT.

DIMENSIONS: mm [INCHES]

TOLERANCES UNLESS OTHERWISE SPECIFIED:
0 PLC ± –
1 PLC ± –
2 PLC ± –
3 PLC ± 0.13[.005]
4 PLC ± –
ANGLES ± –

MATERIAL 13
FINISH SEE TABLE

DWN B. HAYMAKER 28JAN00
CHK J. MOSIER 28JAN00
APVD J. MOSIER 28JAN00
PRODUCT SPEC 108–1332
APPLICATION SPEC 114–7010
WEIGHT –

TE Connectivity

NAME HEADER ASSEMBLY,SURFACE MOUNT, AMPMODU 50/50 GRID (8.12 [.320] MATED HEIGHT)

SIZE A1 | CAGE CODE – | DRAWING NO C–147382 | RESTRICTED TO –

CUSTOMER DRAWING | SCALE 10:1 | SHEET 1 OF 1 | REV D

4805 (1/15)