3/16 ROUND SWAGE STANDOFFS

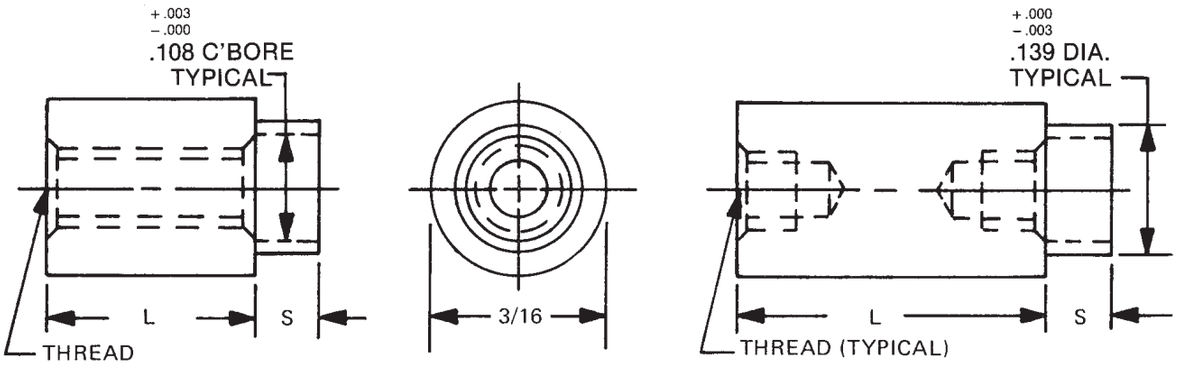

L = STANDOFF LENGTH
S = SHANK LENGTH
P = BOARD THICKNESS

See page iv for installation information

See page 10 for thread depth chart
See page 9 for finish codes
For non-standard parts contact Sales Office

ORDERING CODE

XXXX or XXXXX — LENGTH
X — SHANK
XXX — THREAD
X — MATERIAL
X — FINISH

SWAGE TOOLING		
PUNCH	ANVIL	LENGTH
P-3	AR-18	3/32-3/16
	AR-19	7/32-7/16
	AR-20	15/32-11/16
	AR-21	23/32-1"

SWAGE/PANEL CODE		
±.003	S	P
.075	A	1/32
.105	B	1/16
.135	C	3/32
.165	D	1/8
.230	E	3/16
.290	F	1/4

LENGTH	PART NO.
3/32	**3030A**
1/8	**3030**
5/32	**3030T**
3/16	**3031**
7/32	**3031T**
1/4	**3032**
9/32	**3032T**
5/16	**3033**
11/32	**3033T**
3/8	**3034**
13/32	**3034T**
7/16	**3035**
15/32	**3035T**
1/2	**3036**
17/32	**3036T**

LENGTH	PART NO.
9/16	**3037**
19/32	**3037T**
5/8	**3038**
21/32	**3038T**
11/16	**3039**
23/32	**3039T**
3/4	**3040**
25/32	**3040T**
13/16	**3041**
27/32	**3041T**
7/8	**3042**
29/32	**3042T**
15/16	**3043**
31/32	**3043T**
1"	**3044**

THREAD	CODE
2-56	256
3-48	348

MATERIAL	CODE	RoHS
Aluminum	AL	YES
Brass	B	YES
Stainless Steel	SS	YES
Steel	S	YES

RAF ELECTRONIC HARDWARE
95 Silvermine Road, Seymour, Ct. 06483 Phone: 203-888-2133 Fax: 203-888-9860
e-mail : info@rafhdwe.com Web: www.rafhdwe.com