THIS DRAWING IS UNPUBLISHED. RELEASED FOR PUBLICATION -.- .
© COPYRIGHT – TE Connectivity Ltd. ALL RIGHTS RESERVED.

REVISIONS

P	LTR	DESCRIPTION	DATE	DWN	APVD
	C1	REV PERECO-10-000443	25NOV09	KK	AEG
	D	REVISED PER ECO-18-000976	13APR2018	RS	JO

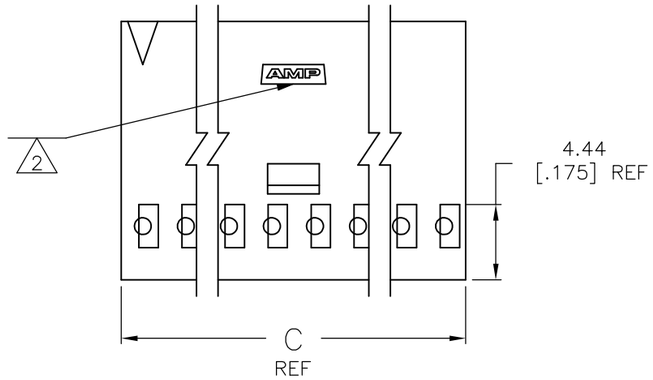

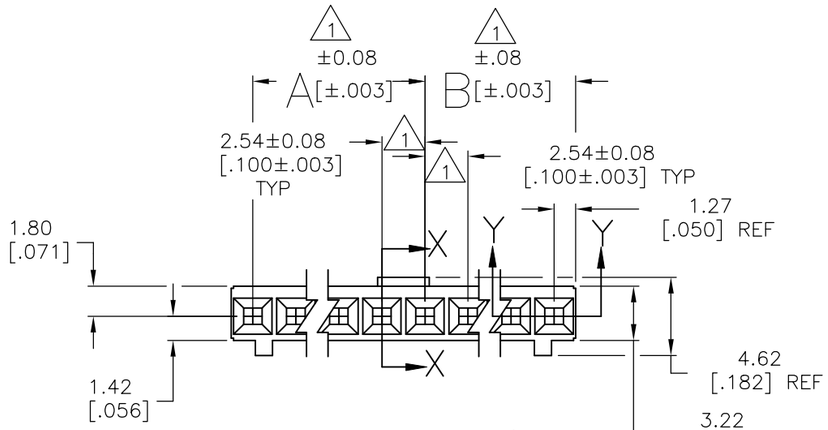

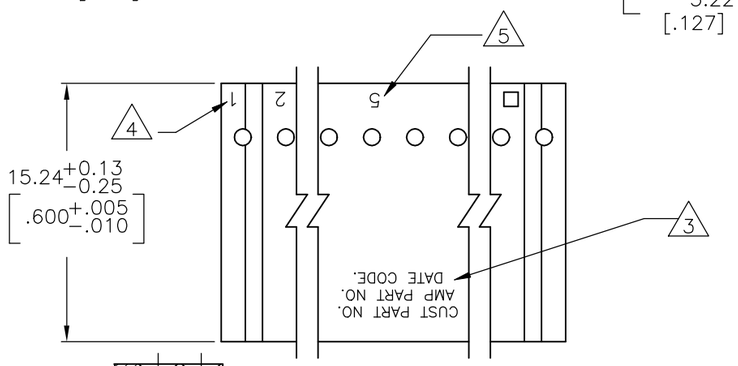

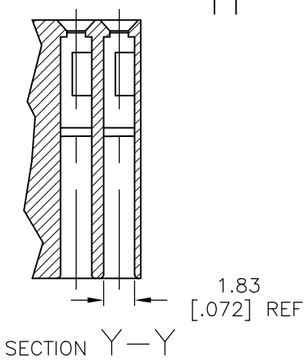

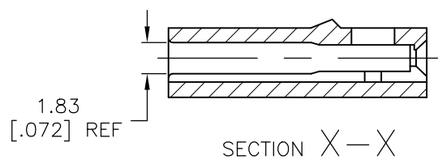

1. CAVITY LOCATION DIMENSIONS INCREASE IN INCREMENTS OF 2.54[.100] TOLERANCE NON–CUMULATIVE.
2. TRADEMARK MOLDED IN RECESSED AREA
3. CUSTOMER PART NUMBER, AMP PART NO., AND DATE CODE MARKED IN AREA SHOWN, WHEN HOUSING SIZE PERMITS (7 POSN OR LARGER). IF SIZE DOES NOT PERMIT, DATE CODE ONLY – MAY BE ROTATED 90 DEG TO FIT.
4. CAVITY IDENT MARKED 1.17±0.38 [.046±.015] HIGH CHARACTERS FIRST CAVITY (ONE SIDE) (FOR PART NO. 102267–1 ONLY)
5. CAVITY IDENT MARKED SECOND, EVERY FIFTH AND NEXT TO LAST CAVITY (ONE SIDE) (EXCEPT PART NO. 102267–1)
6. OBSOLETE PARTS: OBSOLETE CIS STREAMLINING PER D.RENAUD/D.SINISI

OBSOLETE	713W30431	10.16 [.400]	2.54 [.100]	5.08 [.200]	4	102267–9
	–	– –	– –	– –	–	–
	–	– –	– –	– –	–	–
	–	– –	– –	– –	–	–
	–	– –	– –	– –	–	–
	–	– –	– –	– –	–	–
6 OBSOLETE	713W31031	25.40 [1.000]	10.16 [.400]	12.70 [.500]	10	~~102267–3~~
	713W30531	12.70 [.500]	5.08 [.200]	5.08 [.200]	5	102267–2
	713W30331	7.62 [.300]	2.54 [.100]	2.54 [.100]	3	102267–1
	CUSTOMER PART NO.	C	B	A	NO OF POSN	PART NUMBER

THIS DRAWING IS A CONTROLLED DOCUMENT.

DIMENSIONS: mm [INCHES]

TOLERANCES UNLESS OTHERWISE SPECIFIED:
0 PLC ± –
1 PLC ± –
2 PLC ± .02
3 PLC ± .005
4 PLC ± –
ANGLES ± 0° 30'

MATERIAL: FLAME RETARDANT THERMOPLASTIC COLOR – BLACK

FINISH

DWN E.BRANDBERG 28JUN94
CHK P. SREMCICH 28JUN94
APVD P. SREMCICH 28JUN94
PRODUCT SPEC —
APPLICATION SPEC —
WEIGHT

TE Connectivity Ltd.

NAME: CONN. HOUSING, CRIMP SNAP – IN, MOD IV, SINGLE ROW, 2.54[.100] CL, W/ POLARIZATION, DETENT AND MARKING

SIZE A2 | CAGE CODE 00779 | DRAWING NO C-102267 | RESTRICTED TO —

CUSTOMER DRAWING | SCALE 4:1 | SHEET 1 OF 1 | REV D