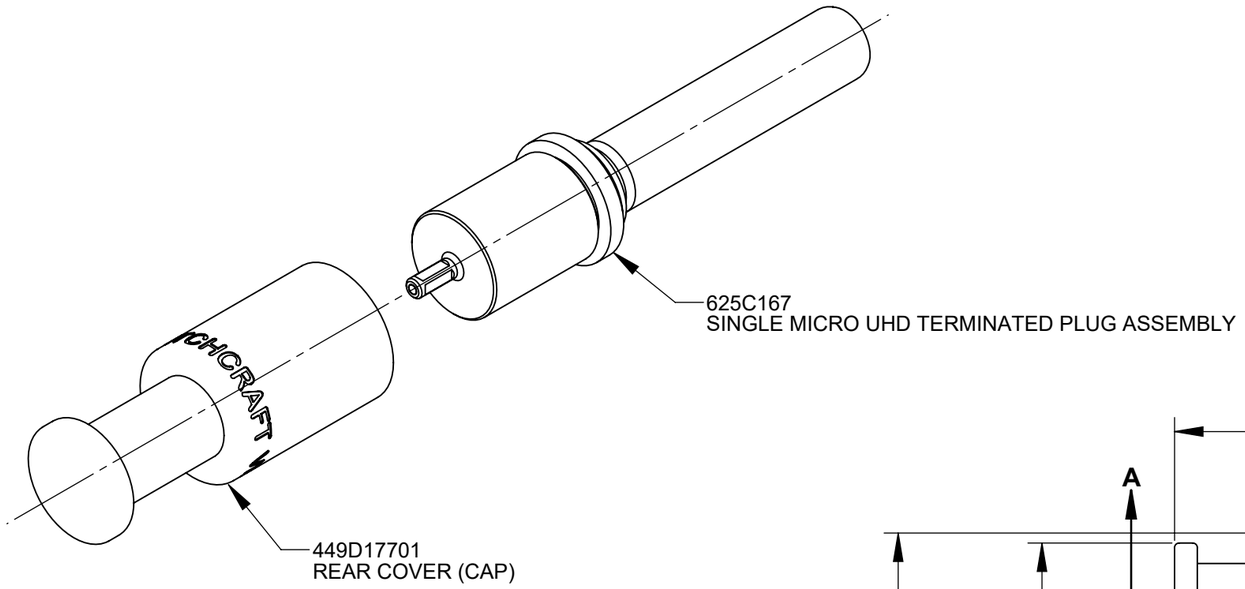

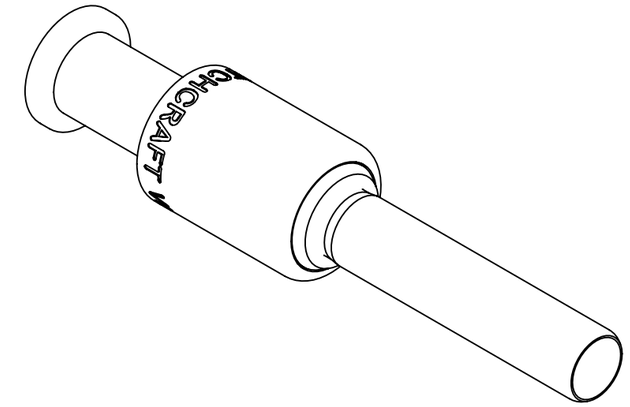

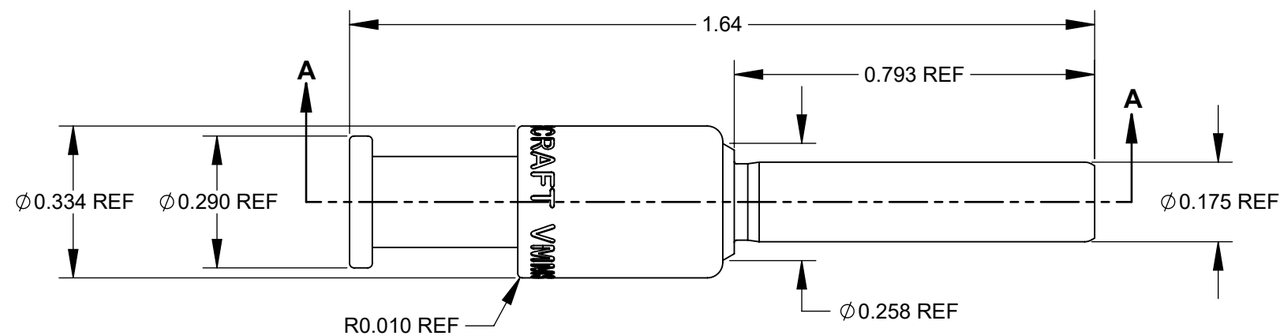

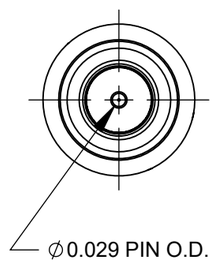

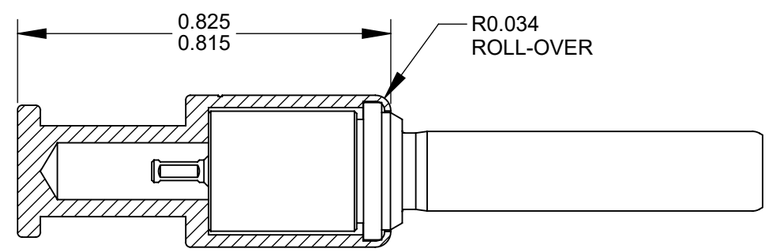

SECTION A-A

NOTES;

1. SLIDE REAR COVER OVER PLUG ASSEMBLY AND STAKE TOGETHER SECURELY.

2. THIS PRODUCT IS RoHS COMPLIANT

REV	ECO NUMBER	DATE	BY	APVD
B	28606	6/20/23	TJK	TJK
A	28195	08/29/19	PC	TJK

REVISIONS

☆ STAR SYMBOL DENOTES CRITICAL DIMENSION

UNLESS OTHERWISE SPECIFIED

1. ALL DIMENSIONS IN INCHES
   - TWO PLACE DECIMALS ±0.01
   - THREE PLACE DECIMALS ±0.005
   - ANGLES ±1°
   - ALL DIA. CONCENTRIC WITHIN 0.005 T.I.R.
2. FEATURES ON THE SAME CENTERLINE MUST BE ALIGNED WITHIN ±0.002
3. REMOVE ALL BURRS

DO NOT SCALE DRAWING

THIS DRAWING DESCRIBES A DESIGN CONSIDERED PROPRIETARY IN NATURE, DEVELOPED AND MANUFACTURED BY SWITCHCRAFT INC. AND IS RELEASED ON A CONFIDENTIAL BASIS FOR IDENTIFICATION PURPOSES ONLY.

SIZE	WIDTH	MULT	LBS/M	TEMPER

FINISH
SPEC No.

MATERIAL
SPEC No.

FIRST USED ON	SCALE
PDR 16006	3:1

DATE DRAWN	BY	CHKD	APVD
01/26/17	PNK	PNK 01/26/17	SRC 01/26/17

Switchcraft®

SHEET 1 OF 1

NAME PLUG ASSEMBLY UHD SINGLE TERM. PLUG, RoHS

PART No. VMMSTPUHD

REV B

SolidWorks CAD File B

ROUTING 146 112 120