Customer Information Sheet

DRAWING No.: M83-LFTIF2N19-0101-321	SHEET 2 OF 2	IF IN DOUBT - ASK	©	NOT TO SCALE	THIRD ANGLE PROJECTION	ALL DIMENSIONS IN mm

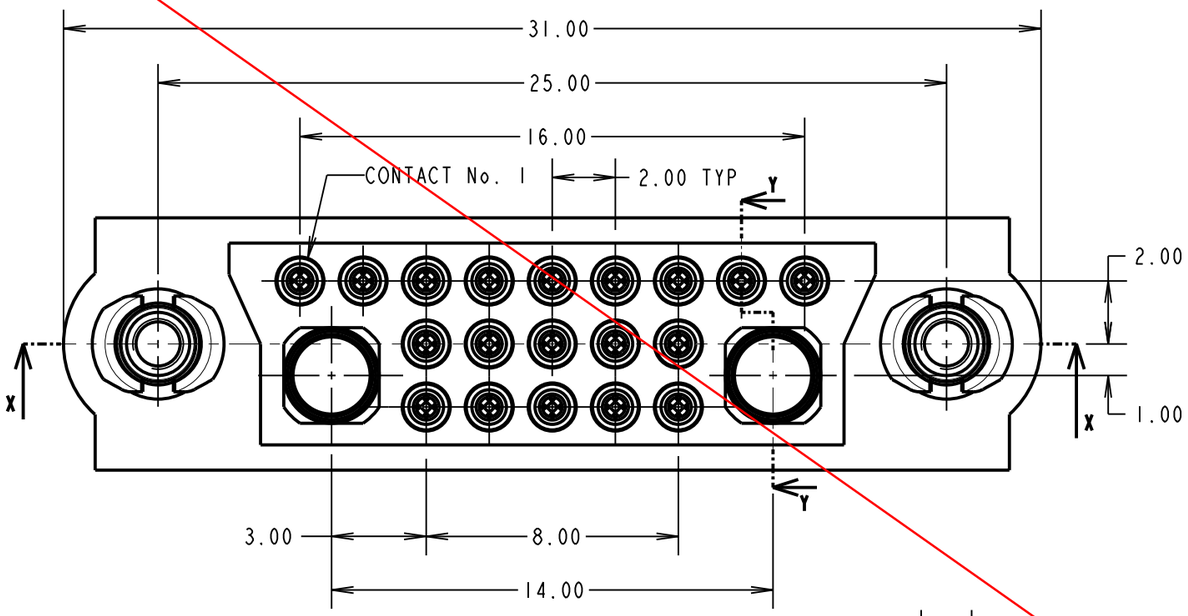

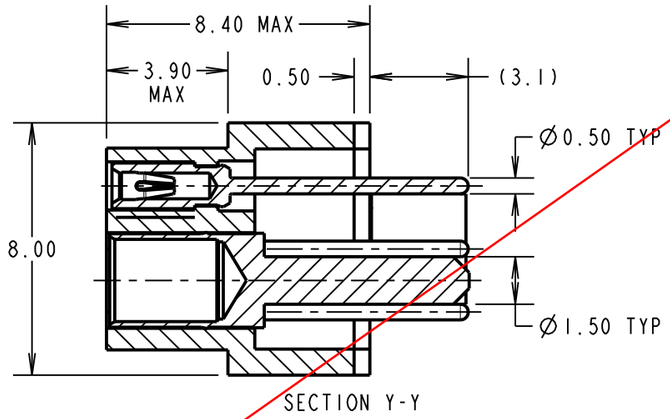

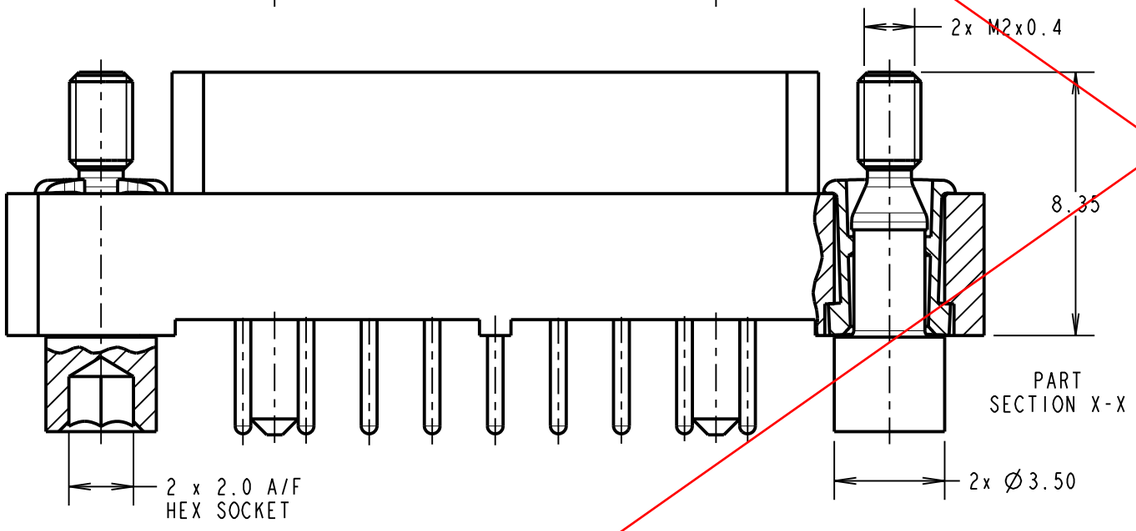

OBSOLETE

SPECIFICATIONS:

MATERIAL:
MOULDING = GLASS-FILLED PPS, UL94V-0, BLACK
JACKSCREW = STAINLESS STEEL
JACKSCREW COLLAR = NICKEL COATED BRASS
SIGNAL CONTACT:
CLIP = BERYLLIUM COPPER
SHELL = COPPER ALLOY
POWER CONTACT = COPPER ALLOY

FINISH:
SIGNAL CONTACT:
CLIP = 0.3µ GOLD
SHELL = 0.25-0.3µ GOLD
POWER CONTACT = GOLD

ELECTRICAL:
SIGNAL CONTACT:
CURRENT RATING AT 25°C = 3.0A MAX
CURRENT RATING AT 85°C = 2.2A MAX
CONTACT RESISTANCE = 25mΩ MAX
POWER CONTACT:
CURRENT RATING = 20A MAX
CONTACT RESISTANCE = 6mΩ MAX
WORKING VOLTAGE = 120V AC/DC
VOLTAGE PROOF = 360V AC/DC
INSULATION RESISTANCE = 100MΩ MIN

MECHANICAL:
DURABILITY = 500 OPERATIONS
SIGNAL CONTACT:
INSERTION FORCE = 1.0N MAX
WITHDRAWAL FORCE = 0.2N MIN
POWER CONTACT:
INSERTION FORCE = 5N MAX
WITHDRAWAL FORCE = 0.5N MIN

ENVIRONMENTAL:
TEMPERATURE RANGE = -55°C TO +125°C

PACKING:
TUBE

FOR COMPLETE SPECIFICATION, SEE COMPONENT SPEC C005XX (LATEST ISSUE)

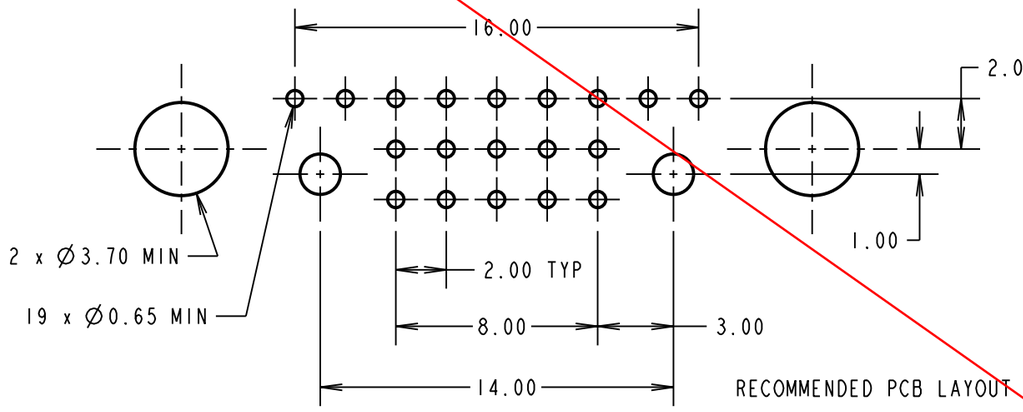

RECOMMENDED PCB LAYOUT

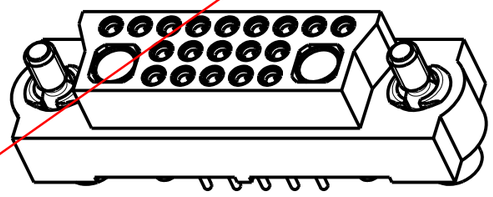

SM	1	16.11.11	11613
NAME	ISS.	DATE	C/NOTE

APPROVED: S. MCCULLAGH
CHECKED: M. G. PLESTED
DRAWN: JM BROOKES
CUSTOMER REF.:
ASSEMBLY DRG:

HARWIN
www.harwin.com
technical@harwin.com

THIS DRAWING AND ANY INFORMATION OR DESCRIPTIVE MATTER SET OUT HEREON ARE CONFIDENTIAL AND COPYRIGHT PROPERTY OF THE HARWIN GROUP AND MUST NOT BE DISCLOSED, LOANED, COPIED OR USED FOR MANUFACTURING, TENDERING OR FOR ANY OTHER PURPOSE WITHOUT THEIR WRITTEN PERMISSION.

TOLERANCES
X. = ±1mm
X.X = ±0.25mm
X.XX = ±0.10mm
X.XXX = ±0.01mm
ANGLES = ±5°
UNLESS STATED

MATERIAL: SEE ABOVE
FINISH: SEE ABOVE
S/AREA: mm²

TITLE: JACKSCREW DATAMATE 3-ROW VERTICAL FEMALE ASSY WITH SPECIAL CONTACTS

DRAWING NUMBER: M83-LFTIF2N19-0101-321

SHT 2 OF 2