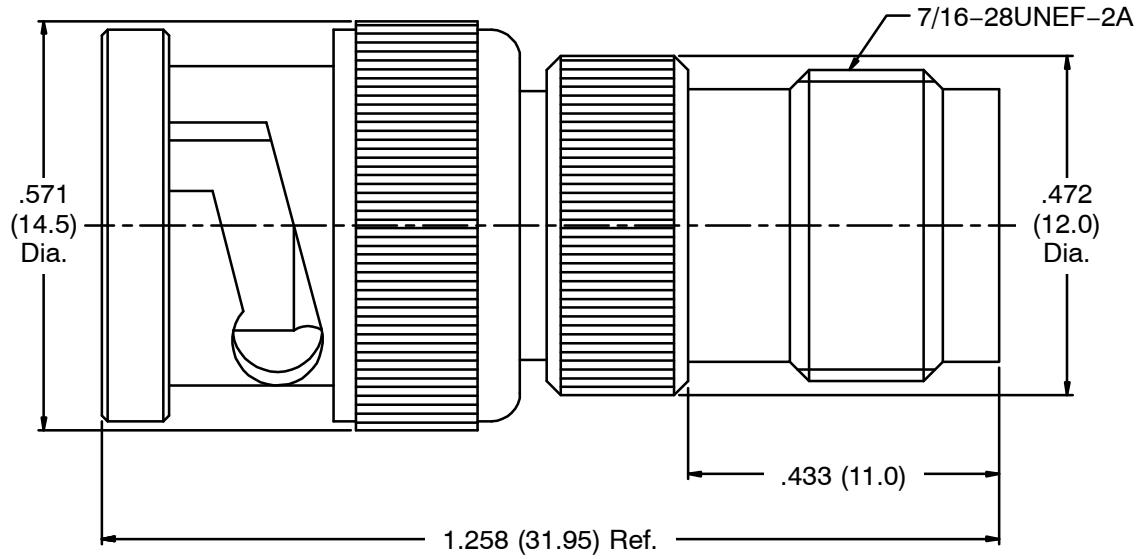

NOTES: Finish (Plating Thickness in Micro–inches)
1. Brass
2. Nickel Pl. 100 Min. Thick over Copper Pl. 50 Min, Thick
3. Phosphor Bronze
4. Gold Pl. 3 Min Thick over Nickel Pl. 50 Min. Thick over Copper Pl. 50 Min. Thick
5. TEFLON

RoHS Compliant

No.	Description	Material	Finish	Q'ty	Drawing No.
9	Shell	Note 1	Note 2	1	
8	Gasket	Rubber	Red	1	
7	Retainer Ring	Note 1	Note 2	1	
6	Spring	SK5	Note 2	1	
5	Washer	Note 1	Note 2	1	
4	Insulator	Note 5	Natural	1	
3	Contact Pin	Note 3	Note 4	1	
2	Insulator	Note 5	Natural	1	
1	Body	Note 1	Note 2	1	

Dimensions are in Inches

Unless Otherwise Specified Tolerances
0.5–6 = ±0.2
6–30 = ±0.4
30–120 = ±0.6
120–315 = ±1
315–1000 = ±1.6
1000–2000 = ±2.4

Scale 4/1 | Issue B

Part No.

Approved | Date 6–22–2017

Checked | Date 6–22–2017

Drawn | Date 6–22–2017

NTE Electronics

Title: BNC Plug to TNC Jack Adapter

Drawing No. 06–B029

File No.